BERGER LAHR

Technical Documentation

Motor manual

3-phase stepping motors

VRDM 3xx

Document: 0098441113309

Edition: V1.00, 02.2006

Berger Lahr GmbH & Co. KG
Breslauer Str. 7
D-77933 Lahr

a company of Schneider Electric

Important information

The drive systems described here are products for general use that conform to the state of the art in technology and are designed to prevent any dangers. However, drives and drive controllers that are not specifically designed for safety functions are not approved for applications where the functioning of the drive could endanger persons. The possibility of unexpected or unbraked movements can never be totally excluded without additional safety equipment. For this reason personnel must never be in the danger zone of the drives unless additional suitable safety equipment prevents any personal danger. This applies to operation of the machine during production and also to all service and maintenance work on drives and the machine. The machine design must ensure personal safety. Suitable measures for prevention of property damage are also required.

See safety section for additional critical instructions.

Not all product variants are available in all countries.
Please consult the current catalogue for information on the availability of product variants.

We reserve the right to make changes during the course of technical developments.

All details provided are technical data and not promised characteristics.

In general, product names must be considered to be trademarks of the respective owners, even if not specifically identified as such.

0098441113309, V1.00, 02.2006

Table of Contents

Important information . . . . . -2

Table of Contents . . . . . -3

Writing conventions and symbols . . . . . -7

1 Introduction

1.1 Overview 1-1

1.2 Options, accessories and wiring 1-2

1.3 Type code and nameplate 1-3
1.3.1 Overview of type code of VRDM 3xx 1-3
1.3.2 Name plate 1-4

1.4 Literature 1-5

1.5 Directives and standards 1-5

1.6 Declaration of conformity 1-7

2 Safety

2.1 Qualification of personnel 2-1

2.2 Intended use 2-1

2.3 Safety instructions 2-2

3 Technical Data

3.1 General features 3-1

3.2 Ambient conditions 3-2

3.3 Life time 3-2

3.4 IP degree of protection 3-3

3.5 Motor models 3-5

3.6 VRDM 36x 3-6
3.6.1 Motor-specific data of VRDM 36x 3-6
3.6.2 Shaft load of VRDM 36x 3-7
3.6.3 Type code of VRDM 36x 3-8
3.6.4 Dimensional drawing of VRDM 36x 3-10
3.6.5 Characteristic curves of VRDM 36x 3-12

3.7 VRDM 39x 3-15
3.7.1 Motor-specific data of VRDM 39x 3-15
3.7.2 Shaft load of VRDM 39x 3-16
3.7.3 Type code of VRDM 39x 3-16
3.7.4 Dimensional drawing of VRDM 39x 3-19
3.7.5 Characteristic curves of VRDM 39x 3-21

0098441113309, V1.00, 02.2006

3.8 VRDM 311x 3-24
3.8.1 Motor-specific data of VRDM 311x 3-24
3.8.2 Shaft load of VRDM 311x 3-25
3.8.3 Type code of VRDM 311x 3-25
3.8.4 Dimensional drawing of VRDM 311x 3-28
3.8.5 Characteristic curves of VRDM 311x 3-30

3.9 Optional holding brake 3-32

3.10 Optional encoder 3-34

3.11 Optional gearbox 3-35
3.11.1 Assignment of motor-gearbox 3-38
3.11.2 Dimensional drawings of gearbox 3-40

4 Installation

4.1 Before installation... 4-2

4.2 Electromagnetic compatibility, EMC 4-3

4.3 Mechanical installation 4-4

4.4 Electrical installation 4-7
4.4.1 Calculation of installation space. 4-8
4.4.2 Motor connection 4-9
4.4.3 Encoder connection 4-11
4.4.4 Holding brake connection 4-12

5 Commissioning

5.1 Preparing for commissioning 5-2

5.2 Running commissioning 5-3

6 Diagnostics and troubleshooting

6.1 Mechanical faults 6-1

6.2 Electrical faults 6-1

7 Accessories and spare parts

7.1 Accessories 7-1

7.2 Motor cable 7-1

8 Service, maintenance and disposal

8.1 Service address 8-1

8.2 Maintenance 8-2

0098441113309, V1.00, 02.2006

9 Glossary

9.1 Units and conversion tables 9-1
9.1.1 Length. 9-1
9.1.2 Mass 9-1
9.1.3 Force. 9-1
9.1.4 Power 9-1
9.1.5 Rotation 9-2
9.1.6 Torque. 9-2
9.1.7 Moment of inertia 9-2
9.1.8 Temperature 9-2
9.1.9 Conductor cross section 9-2

9.2 Terms and Abbreviations. 9-3

10 Index

0098441113309, V1.00, 02.2006

0098441113309, V1.00, 02.2006

Writing conventions and symbols

Work steps

If work steps must be carried out in sequence, they are shown as follows:

■ Special prerequisites for the following work steps

▶ Step 1

◁ Important response to this work step

▶ Step 2

If a response to a work step is specified, this will inform you that the step has been carried out correctly.

Unless otherwise stated, the individual instruction steps must be carried in the given sequence.

Lists

Lists can be sorted alphanumerically or by priority. Lists are structured as follows:

- Point 1
- Point 2
  - Subpoint to 2
  - Subpoint to 2
- Point 3

Making work easier

Information on making work easier can be found at this symbol:

This offers supplementary information on making work easier.
See the chapter on safety for an explanation of the safety instructions.

0098441113309, V1.00, 02.2006

0098441113309, V1.00, 02.2006

1 Introduction

1.1 Overview

The three-phase stepper motors are extremely robust, maintenance-free drives. They carry out stepper motions which are controlled by a positioning controller.

The three-phase stepper motors can be operated at very high resolutions with appropriate control electronics.

Options such as rotation monitoring and holding brake with robust, low-play planetary gears extend the application options.

Features

The three-phase stepper motors are:

- **strong** the optimised internal geometry of the motor ensures a high power density; i.e. up to 50% more torque compared to conventional stepper motors of comparable size.
- **quiet** the sinus commutation of the drive amplifier and the special mechanical construction gives a very quiet and virtually resonance-free stepper motor.
- **versatile** with a flexible modular system and modern type management a wide variety of motor types can be manufactured and delivered in a very short time.

Motor data

Size		**60**	**90**	**110**
Motor type		VRDM 36x	VRDM 39x	VRDM 311x
Nominal torque M_N	Nm	0.45 - 1.50	2.00 - 6.00	12.00 - 16.50
Holding torque M_H	Nm	0.51 - 1.70	2.26 - 6.78	13.56 - 18.65
Steps per revolution [1)]		200 / 400 / 500 / 1000 / 2000 / 4000 / 5000 / 10000		
Step angleα	°	1.8 / 0.9 / 0.72 / 0.36 / 0.18 / 0.09 / 0.072 / 0.036		
Motor phase current I_N	A	0.9 - 5.8	1.75 - 5.8	4.1 - 4.75
Nominal voltage of DC bus U_N	V_{DC}	24/35, 130, 325	24/35, 130, 325	325

1) depending on the controller

0098441113309, V1.00, 02.2006

1.2 Options, accessories and wiring

The motors are optionally available with:

- Encoder
- holding brake
- PLE or PLS gearbox
- angled and rotatable plug connectors
- various degrees of protection

For the options see the technical data in the various motor descriptions.

The following accessories are available:

- controller for holding brake
- Cable

Fully finished motor and sensor system wiring precisely designed for the drive systems ensures that motor and power amplifier are perfectly connected.

0098441113309, V1.00, 02.2006

1.3 Type code and nameplate

The type code is explained below. Type code for every motor size is shown in full in "Technical Data".

1.3.1 Overview of type code of VRDM 3xx

Example:	**VRDM**	**3**	**9**	**10**	**/**	**50**	**L**	**H**	**C**	**E**	**O**	**IP41**	**1**	**5**	**DO**	**O**	**OO**	**2**	**B**	**B**	**O**	**OOO**
Phase count	VRDM	**3**	X	X	/	50	L	H	C	E	O	IP41	1	5	DO	O	OO	2	B	B	O	OOO
Size (flange)	VRDM	3	**X**	X	/	50	L	H	C	E	O	IP41	1	5	DO	O	OO	2	B	B	O	OOO
Length	VRDM	3	X	**X**	/	50	L	H	C	E	O	IP41	1	5	DO	O	OO	2	B	B	O	OOO
Pole pair count	VRDM	3	X	X	/	**50**	L	H	C	E	O	IP41	1	5	DO	O	OO	2	B	B	B	OOO
Rotor	VRDM	3	X	X	/	50	**L**	H	C	E	O	IP41	1	5	DO	O	OO	2	B	B	O	OOO
Maximum voltage	VRDM	3	X	X	/	50	L	**H**	C	E	O	IP41	1	5	DO	O	OO	2	B	B	B	OOO
Connection type (motor/encoder)	VRDM	3	X	X	/	50	L	H	**C**	E	O	IP41	1	5	DO	O	OO	2	B	B	O	OOO
Position capture	VRDM	3	X	X	/	50	L	H	C	**E**	O	IP41	1	5	DO	O	OO	2	B	B	O	OOO
holding brake	VRDM	3	X	X	/	50	L	H	C	E	**O**	IP41	1	5	DO	O	OO	2	B	B	O	OOO
Degree of protection	VRDM	3	X	X	/	50	L	H	C	E	O	**IP41**	1	5	DO	O	OO	2	B	B	O	OOO
Gearbox type	VRDM	3	X	X	/	50	L	H	C	E	O	IP41	**1**	5	DO	O	OO	2	B	B	O	OOO
Gear ratio	VRDM	3	X	X	/	50	L	H	C	E	O	IP41	1	**5**	DO	O	OO	2	B	B	O	OOO
Shaft diameter	VRDM	3	X	X	/	50	L	H	C	E	O	IP41	1	5	**DO**	O	OO	2	B	B	O	OOO
Shaft modelMotor	VRDM	3	X	X	/	50	L	H	C	E	O	IP41	1	5	DO	**O**	OO	2	B	B	O	OOO
Centring collar	VRDM	3	X	X	/	50	L	H	C	E	O	IP41	1	5	DO	O	**OO**	2	B	B	O	OOO
Second shaft	VRDM	3	X	X	/	50	L	H	C	E	O	IP41	1	5	DO	O	OO	**2**	B	B	O	OOO
Connection direction motor plug	VRDM	3	X	X	/	50	L	H	C	E	O	IP41	1	5	DO	O	OO	2	**B**	B	O	OOO
Connection direction encoder plug	VRDM	3	X	X	/	50	L	H	C	E	O	IP41	1	5	DO	O	OO	2	B	**B**	O	OOO
Wire output	VRDM	3	X	X	/	50	L	H	C	E	O	IP41	1	5	DO	O	OO	2	B	B	**O**	OOO
Wire length	VRDM	3	X	X	/	50	L	H	C	E	O	IP41	1	5	DO	O	OO	2	B	B	O	**OOO**

0098441113309, V1.00, 02.2006

1.3.2 Name plate

The name plate shows the most important motor data.

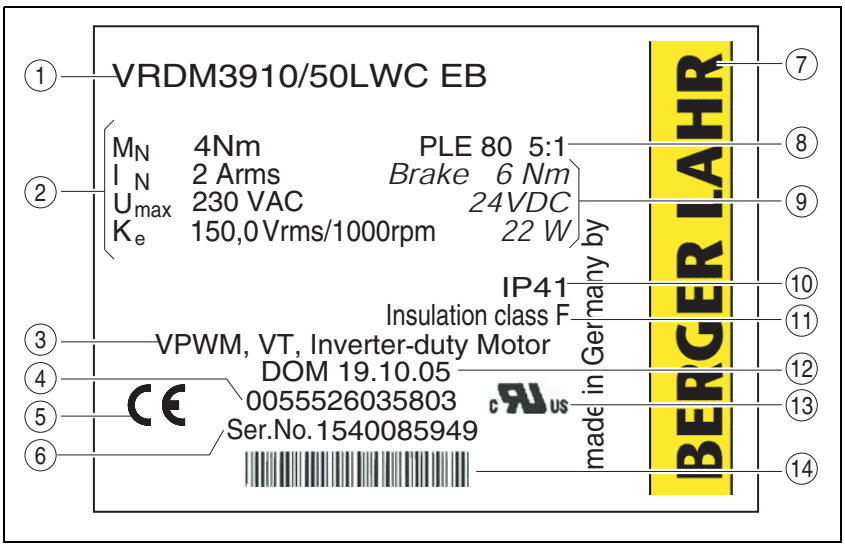

Figure 1.1 Name plate

(1) Motor type, see type code
(2) Nominal torque at standstill
phase current at standstill
maximum supply voltage
voltage constant
(3) variable PWM
variable torque
motor for converter operation only
(4) Order number
(5) CE mark
(6) Serial number
(7) manufacturer's name and logo
(8) gearbox type and gear ratio
(9) holding torque of the holding brake
nominal voltage of the holding brake
power consumption of the holding brake
(10) degree of protection
(11) Temperature class (155)
(12) cUR mark
(13) Date of manufacture
(14) Barcode

0098441113309, V1.00, 02.2006

1.4 Literature

- Rummich, Erich: Elektrische Schrittmotoren und Antriebe. ISBN: 3-8169-2458-1, Expert-Verlag, Renningen
- Kreuth, Hans-Peter: Schrittmotoren. ISBN: 3-486-202642-3, Oldenbourg Verlag, München
- Vogel, Johannes: Elektrische Antriebstechnik. ISBN: 3-7785-2649-9, Hüthig Verlag Heidelberg
- Riefenstahl, Ulrich: Elektrische Antriebstechnik - Leitfaden der Elektrotechnik. ISBN: 3-519-06429-4, B.G. Teubner Stuttgart, Leipzig

1.5 Directives and standards

The EC directives define the minimum requirements - particularly safety requirements - applicable to a product and must be complied with by all manufacturers and dealers marketing the product in the member states of the European Union (EU).

The EC directives describe the main requirements for a product. The technical details are laid down in the harmonized standards, which are published in Germany as the DIN EN standards. If there is not yet any EN standard applicable to a particular product area, existing technical standards and regulations will apply.

CE mark

With the declaration of conformity and the CE mark on the product the manufacturer certifies that the product complies with the requirements of all relevant EC directives. The drive systems described here can be used anywhere in the world.

EC Machine Directive

The drive systems described here are not machines as defined by the EC Machine Directive (98/37/EEC) but components for installation in machines. They do not have moving parts designed for specific purposes. However, they can be components of a machine or system.

The manufacturer must certify that the complete system conforms to the machine directive with the CE mark.

EC EMC Directive

The EC Electromagnetic Compatibility Directives (89/336/EEC) applies to products that cause electromagnetic interference or whose operation may be be adversely affected by electromagnetic interference.

Conformity with the EMC Directive can only be expected of drive systems after correct installation in the machine. The information on ensuring electromagnetic compatibility given in the chapter on "Installation" must be followed to ensure that the drive system in the machine or system is EMC-compatible and that the product can legally be operated.

EC Low-Voltage Directive

The EC Low-Voltage Directive (73/23/EEC) lays down safety requirements for 'electrical apparatus' as protection against the risks that can originate in such devices and can be created in response to external influences.

The drive systems described here comply with the EN 50178 Standard as per the Low-Voltage Directive.

Standards for safe operation of the drive systems

EN 50178: Fitting power systems with electronic equipment

EN 60034-ff: Rotating electrical machines

0098441113309, V1.00, 02.2006

	EN 60664: Insulation coordination
	UL1004: Motor classification under UL
Standards for terms and mechanical connections	DIN 42021: Stepper motor terms, symbols, units and characteristic curves
	DIN 332-1: Centre hole
	DIN 6885: Parallel keys, grooves
	DIN 6888: Disc springs
	EN 50347: Standardised dimensions, centring diameter, hole circle, fastening screw

0098441113309, V1.00, 02.2006

1.6 Declaration of conformity

EC Declaration of Conformity
Year 2005

BERGER LAHR

BERGER LAHR GmbH & Co.KG
Breslauer Str. 7
D-77933 Lahr

☒ according to EC Directive Low Voltage 73/23/EC, changed by CE Marking Directive 93/68/EC
☐ according to EC Directive on Machinery 98/37/EC
☐ according to EC Directive EMC 2004/108/EC

We declare that the products listed below meet the requirements of the mentioned EC Directives with respect to design, construction and version distributed by us. This declaration becomes invalid with any modification on the products not authorized by us.

Designation:	3 Phase Stepping Motor	
Type:	VRDM3xxxx/50xxx	
Product number:	0x5xx2xxxxxxx	
Applied harmonized standards, especially:	EN 60034-1:2005 EN 60034-5:2001 EN 60664-1:2003	Temperature class 155 (F) Protection class according product documenation Insulation system
Applied national standards and technical specifications, especially:	UL 1004 Product documentation	
Company stamp:	Berger Lahr GmbH & Co. KG Postfach 11 80 · D-77901 Lahr Breslauer Str. 7 · D-77933 Lahr	
Date/ Signature:	26 October 2005	
Name/ Department:	Wolfgang Brandstätter/R & D Drive Systems	

0098441113309, V1.00, 02.2006

0098441113309, V1.00, 02.2006

2 Safety

2.1 Qualification of personnel

Commissioning, operation and maintenance must be conducted by trained electrical and controller technicians only.

The technicians must be familiar with the contents of all technical documentation relevant to this product.

The technicians must have sufficient training, knowledge and experience to recognise and avoid dangers.

The technicians must be familiar with the relevant standards, regulations and safety regulations that must be observed during installation, operation and maintenance of the product.

2.2 Intended use

The drive systems described here are products for general use that conform to the state of the art in technology and are designed to prevent any dangers. However, drives and drive controllers that are not specifically designed for safety functions are not approved for applications where the functioning of the drive could endanger persons. The possibility of unexpected or unbraked movements can never be totally excluded without additional safety equipment. For this reason personnel must never be in the danger zone of the drives unless additional suitable safety equipment prevents any personal danger. This applies to operation of the machine during production and also to all service and maintenance work on drives and the machine. The machine design must ensure personal safety. Suitable measures for prevention of property damage are also required.

In the system configuration described the drive systems must be used in industrial applications only and must have a fixed connection only.

In all cases the applicable safety regulations and the specified operating conditions, such as environmental conditions and specified technical data, must be observed.

The drive system must not be commissioned and operated until completion of installation in accordance with the EMC regulations and the specifications in this manual.

To prevent personal injury and damage to property damaged drive systems must not be installed or operated.

Changes and modifications of the drive systems are not permitted and if made all no warranty and liability will be accepted.

The drive system must be operated only with the specified wiring and approved accessories. In general, use only original accessories and spare parts.

The drive systems must not be operated in an environment subject to explosion hazard (ex area).

0098441113309, V1.00, 02.2006

2.3 Safety instructions

⚠ DANGER

Electric shock, fire or explosion

- Only technicians who are familiar with and understand the contents of this manual and the other relevant manuals are authorised to work on and with this drive system.
- Before working on the drive system:
  - Switch off power to all terminals.
  - Place a sign "DO NOT SWITCH ON" on the switch and lock to prevent its being switched on.
  - Allow the DC bus capacitors to discharge (see power amplifier manual).
  - Check that there is no power.
- Do not short-circuit DC bus or touch unshielded components or screws of the terminals under voltage.
- Install all covers and close the housing doors before applying power.
- The motor generates voltage when the shaft is rotated. Lock the shaft of the motor to prevent rotation before starting work on the drive system.
- AC voltages may jump over unused wires in the motor cable. Isolate unused wires at both ends of the motor cable.
- The system manufacturer is responsible for compliance with all applicable regulations relevant to earthing the drive system. Extend the earth through the motor cable with an additional earth at the motor housing.

Failure to follow these instructions will result in death or serious injury.

0098441113309, V1.00, 02.2006

3 Technical Data

The following pages contains information on the VRDM 3xx motor family and an overview of the gearboxes.

3.1 General features

The series VRDM 3xx motors are three-phase stepper motors. They are distinguished by:

- high power density
- integrated thermal winding monitoring in accordance with the EN requirements for "decoupled"
- test voltage in accordance with EN 60034-1 (IEC 60034-1)
- insulation system class 155 (F) in accordance with EN 60034-1 (IEC 60034-1)
- Mechanical vibration A in accordance with EN 60034-14 (IEC 60034-14)
- Shaft eccentricity and axial precision in accordance with EN 50347 (IEC 60072-1)
- colour: black RAL 9005

Maximum press-on force

The maximum press-on force is related to the loading ratio of the bearing. The use of assembly paste (e.g. Klüberpaste 46 MR 401) on the shaft and drive element simplifies pressing on.

If the output shaft is threaded, we advise you to push the output element onto the output shaft. This prevents any axial force from acting on the bearing.

Alternatively the output shaft may be also shrunk on, clamped or glued.

Note the following:

- The Motor must not be opened by the customer. If it is opened it will be partially demagnetuized with a consequent loss of power.
- In the case of motors with terminal box, the cover can be opened to connect the terminals.
- Radial and axial limit loads must not be applied simultaneously
- The shaft must be supported if components are pressed onto the shaft ends.
- Please note the saftey information.

0098441113309, V1.00, 02.2006

3.2 Ambient conditions

Environmental influences: ambient climate for transport and storage

The motors must be in a dry, dust-free and vibration-free environment during transport and storage. The storage and transport temperature must remain in the range given below; in case of doubt the storage area must be air-conditioned.

The storage period is primarily determined by the durability of the lubricants in the warehouses and should be less than 36 months. Occasional operation of the drive solution is recommended to ensure that it still operates.

Ambient conditions		
ambient operating temperature	°C	-25 ... +40
Installation height without power reduction	m	< 1000 above MSL
Transport and storage temperature	°C	-25 ... +70
Relative humidity	%	75 (annual average), 95 (over 30 days, non-condensing)
Mechanical vibration in operation in accordance with EN 60034-14		A
Continuous shocks as per DIN EN 60068-2-29		
• Number of shocks per direction		100
• Peak acceleration	m/s^2	20
Degree of protection as per EN 60034-5		
• Total external shaft bushing		IP56
• Shaft bushing without shaft sealing ring		IP41
Temperature class as per EN 60034-1		155 (F)
Shaft eccentricity and axial precision		[as per EN 50 347 (IEC 60072-1)]
Maximum rotary acceleration	rad/s^2	200000

3.3 Life time

The life time of the motors when operated correctly is limited primarily by the bearing life.

The following operating conditions can in some cases significantly reduce the life time:

- Installation altitude above 1000 m over sea level
- Continuous operating temperatures greater than 80°C
- Angular travel less than 100°
- Operation with very high rotary accelerations
- Operation under vibration stress greater than 20 m/s^2
- High cycle frequencies
- Allowing sealing rings to run dry
- Wetting of the drive by aggressive media
- Condensation and icing of functional parts
- Exceeding the permissible shaft load

0098441113309, V1.00, 02.2006

3.4 IP degree of protection

The motors have the following IP degrees of protection as per EN 60034-5:

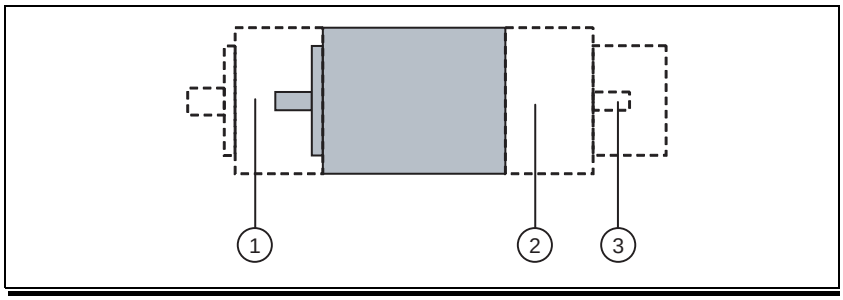

Item			Degree of protection
1	Motor front	PLE gearbox	IP 54
		PLS gearbox	IP 65
		Shaft bushing	IP 41, IP 56 [1)]
2	Motor connection	Braided wires	IP 41
		Terminal box, connector	IP 56
3	Back of motor	2. Shaft end	IP 41
		Holding brake, encoder	IP 56

1) optional with VRDM 39x and VRDM 311x

The motors can also optionally be fitted with a radial shaft seal to place them in protection class IP56. However, this restricts the maximum speed to 3000 1/min. With mounting position IM V3 (drive shaft vertical, shaft end up) only protection class IP41 is guaranteed. The degree of protection of the drive is determined by the weakest component.

Note the following:

- The radial shaft sealing ring is prelubricated.
- Allowing the seals to run dry increases friction and greatly reduces the service life of the sealing rings.

0098441113309, V1.00, 02.2006

Overview of IP protection

First digit		Second digit	
Protection against foreign bodies		**Protection against water**	
0	no protection	0	no protection
1	foreign body > 50mm	1	vertically falling drops
2	foreign body > 12mm	2	diagonally falling drops (75°-90°)
3	foreign body > 2.5mm	3	spray water
4	foreign body > 1mm	4	splashing water
5	dust-protected	5	jet water
6	dust-proof	6	heavy sea
		7	immersion
		8	continuous immersion

0098441113309, V1.00, 02.2006

3.5 Motor models

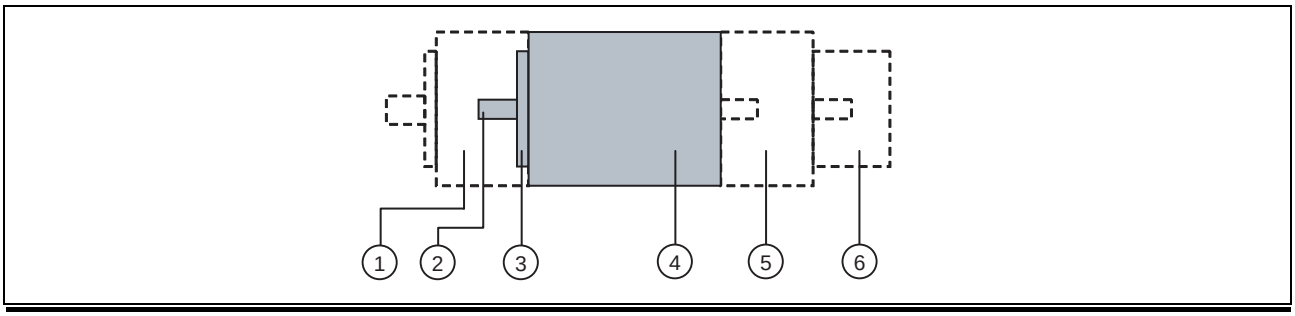

	1	2	3	4			5	6
Motor	**gear**	**shaft [mm]**	**centring collar [mm]**	**Motor type**			**Motor connection**	**Options**
				Size	**Length**	**winding**		
VRDM 36x	3:1	D = 6.35	D = 38.1	60	4	H	Braided wires 1)	2. Shaft end 3)
	5:1				6	H ; N	Terminal box 2)	Holding brake 3)
	8:1	D = 8	D = 38.1	60	8	H ; N ; W	Plug	Encoder 4)
VRDM 39x	3:1	D = 9,5	D = 60	90	7	H ; N ; W	Braided wires 1)	2. Shaft end 3)
	5:1	D = 12	D = 73		10		Terminal box 2)	Holding brake 3)
	8:1	D = 14	D = 60	90	13	H ; N ; W	Plug	Encoder 4)
			D = 73					
VRDM 311x	3:1	D = 19	D = 56	110	17	W	Terminal box 2)	2. Shaft end 3)
	5:1						Plug	Holding brake 3)
	8:1							Encoder 4)

1) Wire outlet at 2nd shaft end to the side only
2) Terminal bar inside the motor; sealed with a cable retaining screw; EMC-tested
3) only one feature can be selected; either 2nd shaft end or holding brake
4) only with motors with connector type (2nd shaft end or holding brake are possible)

0098441113309, V1.00, 02.2006

3.6 VRDM 36x

The stepper motors of the VRDM 36x series are manufactured as the VRDM 364, VRDM 366 and VRDM 368 types. The edge length of the flange is 57.2 mm. The terms and formulas listed in the following tables correspond to DIN 42021 Part 2.

3.6.1 Motor-specific data of VRDM 36x

Motor type		**VRDM 364**	**VRDM 366**		**VRDM 368**		
Winding		**H**	**H**	**N**	**H**	**N**	**W**
Max. supply voltage U_{max}	V_{AC}	25	25	92	25	92	230
Max. voltage against PE	V_{AC}	32	32	125	32	125	250
Nominal voltage of DC bus U_N	V_{DC}	24 / 35	24 / 35	130	24 / 35	130	325
Nominal torque M_N	Nm	0.45	0.90	0.90	1.50	1.50	1.50
Holding torque M_H	Nm	0.51	1.02	1.02	1.70	1.70	1.70
Rotor inertia J_R	kgcm²	0.1	0.22	0.22	0.38	0.38	0.38
Steps per revolution [1]		200 / 400 / 500 / 1000 / 2000 / 4000 / 5000 / 10000					
Step angleα	°	1.8 / 0.9 / 0.72 / 0.36 / 0.18 / 0.09 / 0.072 / 0.036					
Systematic angular tolerance $\Delta\alpha_s$ [2]	’	±6	±6	±6	±6	±6	±6
Max. starting frequency f_{Aom}	kHz	8.5	8.0	8.5	6.0	8.5	8.5
Motor phase current I_N	A_{rms}	5.2	5.8	1.6	5.8	1.9	0.9
Winding resistance R_W	Ω	0.42	0.46	3.3	0.7	4.8	25
Rate-of-current rise time constant t	ms	2.1	3.3	3.3	4.6	4.6	4.6
Frame m [3]	kg	1.3	1.6	1.6	2.0	2.0	2.0

1) depending on the controller
2) Measured at 1000 steps/revolution, unit: angular minutes
3) Earth of motor type with cable retaining screws or connector

0098441113309, V1.00, 02.2006

3.6.2 Shaft load of VRDM 36x

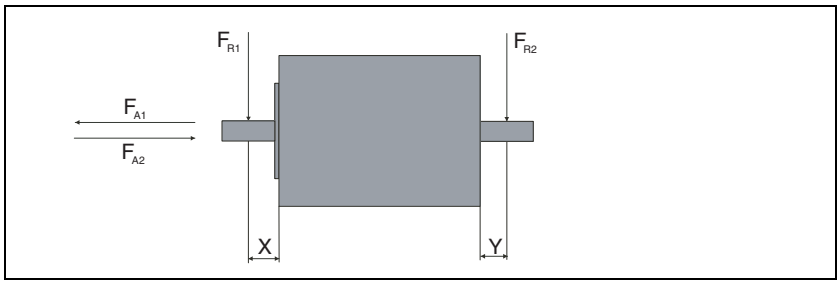

The following conditions apply:

- speed n = 600 1/min
- ambient temperature = 40°C (ca. 80°C storage temperature)
- 100% Duty Cycle at rated torque

When these conditions apply the maximum forces shown in the table below can act on the shaft, but not simultaneously:

Motor type		VRDM 364	VRDM 366	VRDM 368
Max. radial force of 1st shaft end F_{R1} 1)	N	24	24	50
Max. radial force of 2nd shaft end (optional) F_{R2} 1)	N	25 / 40 2)	25 / 40 2)	25 / 40 2)
Max. axial force tension F_{A1}	N	100	100	100
Max. axial force pressure F_{A2}	N	8.4	8.4	8.4
Nominal bearing life L_{10h} 3)	h	20000	20000	20000

1) Point of attack of radial force: X = Y = 10mm distance from flange
2) 1. Value: motors with terminal box, connector or encoder; 2. Value: motors with braided wires
3) Operating hours at a failure probability of 10%

0098441113309, V1.00, 02.2006

3.6.3 Type code of VRDM 36x

Example:	**VRDM**	**3**	**6**	**8**	**/**	**50**	**L**	**H**	**C**	**E**	**O**	**IP41**	**1**	**5**	**DO**	**O**	**OO**	**2**	**B**	**B**	**O**	**OOO**
Phase count 3	VRDM	**3**	6	8	/	50	L	H	C	E	O	IP41	1	5	DO	O	OO	2	B	B	O	OOO
Size (flange) 6 = 57.2 mm	VRDM	3	**8**	8	/	50	L	H	C	E	O	IP41	1	5	DO	O	OO	2	B	B	O	OOO
Length 4 = 42 mm 6 = 56 mm 8 = 79 mm	VRDM	3	6	**8**	/	50	L	H	C	E	O	IP41	1	5	DO	O	OO	2	B	B	O	OOO
Pole pair count 50	VRDM	3	6	8	/	**50**	L	H	C	E	O	IP41	1	5	DO	O	OO	2	B	B	B	OOO
Rotor L = laminated rotor plate	VRDM	3	6	8	/	50	**L**	H	C	E	O	IP41	1	5	DO	O	OO	2	B	B	O	OOO
Maximum voltage H = 25 V_{AC} (35 V_{DC}) N = 92 V_{AC} (130 V_{DC}) W = 230 V_{AC} (325 V_{DC})	VRDM	3	6	8	/	50	L	**H**	C	E	O	IP41	1	5	DO	O	OO	2	B	B	B	OOO
Connection type (motor/encoder) A = braided wires B = terminal box C = connector	VRDM	3	6	8	/	50	L	H	**C**	E	O	IP41	1	5	DO	O	OO	2	B	B	O	OOO
Position capture E = encoder (1000 Inc./rev.) O = without encoder	VRDM	3	6	8	/	50	L	H	C	**E**	O	IP41	1	5	DO	O	OO	2	B	B	O	OOO
holding brake B = brake O = without brake	VRDM	3	6	8	/	50	L	H	C	E	**O**	IP41	1	5	DO	O	OO	2	B	B	O	OOO
Degree of protection IP41	VRDM	3	6	8	/	50	L	H	C	E	O	**IP41**	1	5	DO	O	OO	2	B	B	O	OOO
Gearbox type O = without gearbox 1 = PLE 40 2 = PLE 60 A = PLS 70	VRDM	3	6	8	/	50	L	H	C	E	O	IP41	**1**	5	DO	O	OO	2	B	B	O	OOO
Gear ratio O = without gearbox 3 = 3:1 5 = 5:1 8 = 8:1	VRDM	3	6	8	/	50	L	H	C	E	O	IP41	1	**5**	DO	O	OO	2	B	B	O	OOO
Shaft diameter D6 = 6.35 mm D8 = 8 mm DO = motor with gearbox	VRDM	3	6	8	/	50	L	H	C	E	O	IP41	1	5	**DO**	O	OO	2	B	B	O	OOO
Shaft modelfront O = smooth shaft or with gearbox	VRDM	3	6	8	/	50	L	H	C	E	O	IP41	1	5	DO	**O**	OO	2	B	B	O	OOO
Centring collar 38 = 38.10 mm 00 = motor with gearbox	VRDM	3	6	8	/	50	L	H	C	E	O	IP41	1	5	DO	O	**OO**	2	B	B	O	OOO
Second shaft: O = without 2 = with	VRDM	3	6	8	/	50	L	H	C	E	O	IP41	1	5	DO	O	OO	**2**	B	B	O	OOO

0098441113309, V1.00, 02.2006

Example:	**VRDM**	**3**	**6**	**8**	**/**	**50**	**L**	**H**	**C**	**E**	**O**	**IP41**	**1**	**5**	**DO**	**O**	**OO**	**2**	**B**	**B**	**O**	**OOO**
Connection direction motor plug O = without, L = left, R = right B = rear, F = front, S = straight	VRDM	3	6	8	/	50	L	H	C	E	O	IP41	1	5	DO	O	OO	2	**B**	B	O	OOO
Connection direction encoder plug O = without, L = left, R = right B = rear, F = front, S = straight	VRDM	3	6	8	/	50	L	H	C	E	O	IP41	1	5	DO	O	OO	2	B	**B**	O	OOO
Wire output O = without S = side B = rear	VRDM	3	6	8	/	50	L	H	C	E	O	IP41	1	5	DO	O	OO	2	B	B	**O**	OOO
Wire length OOO = none XXX = XXX mm (max. 400)	VRDM	3	6	8	/	50	L	H	C	E	O	IP41	1	5	DO	O	OO	2	B	B	O	**OOO**

0098441113309, V1.00, 02.2006

3.6.4 Dimensional drawing of VRDM 36x

The following applies for the dimensional drawings:

(1) motor with holding brake

	L	D
VRDM 364	42	6.35
VRDM 366	56	6.35
VRDM 368	79	8

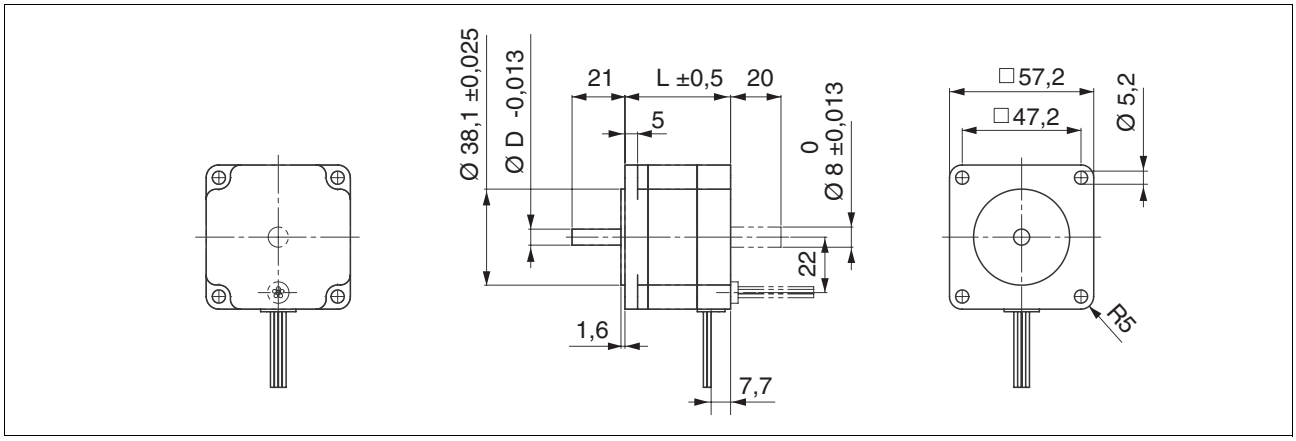

Figure 3.1 Dimensional drawing of VRDM 36x in braided wire type

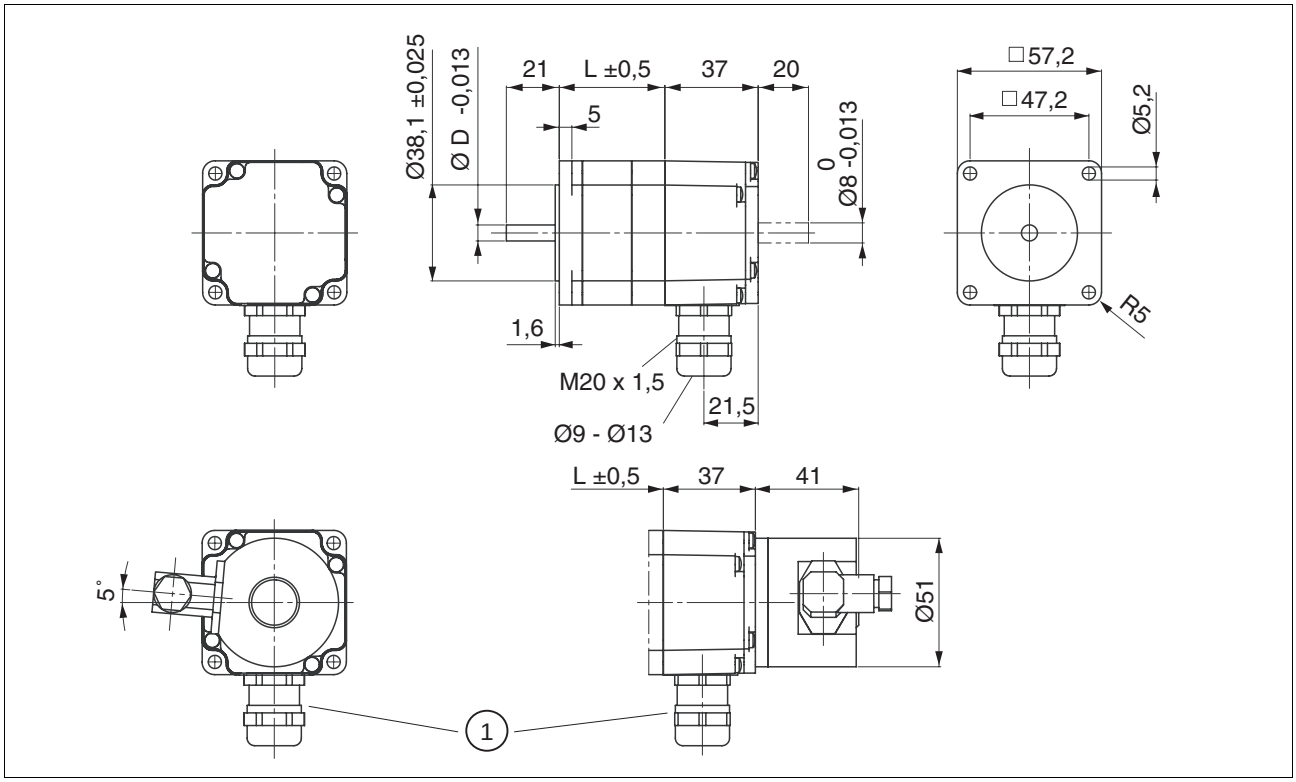

Figure 3.2 Dimensional drawing of VRDM 36x in terminal type

0098441113309, V1.00, 02.2006

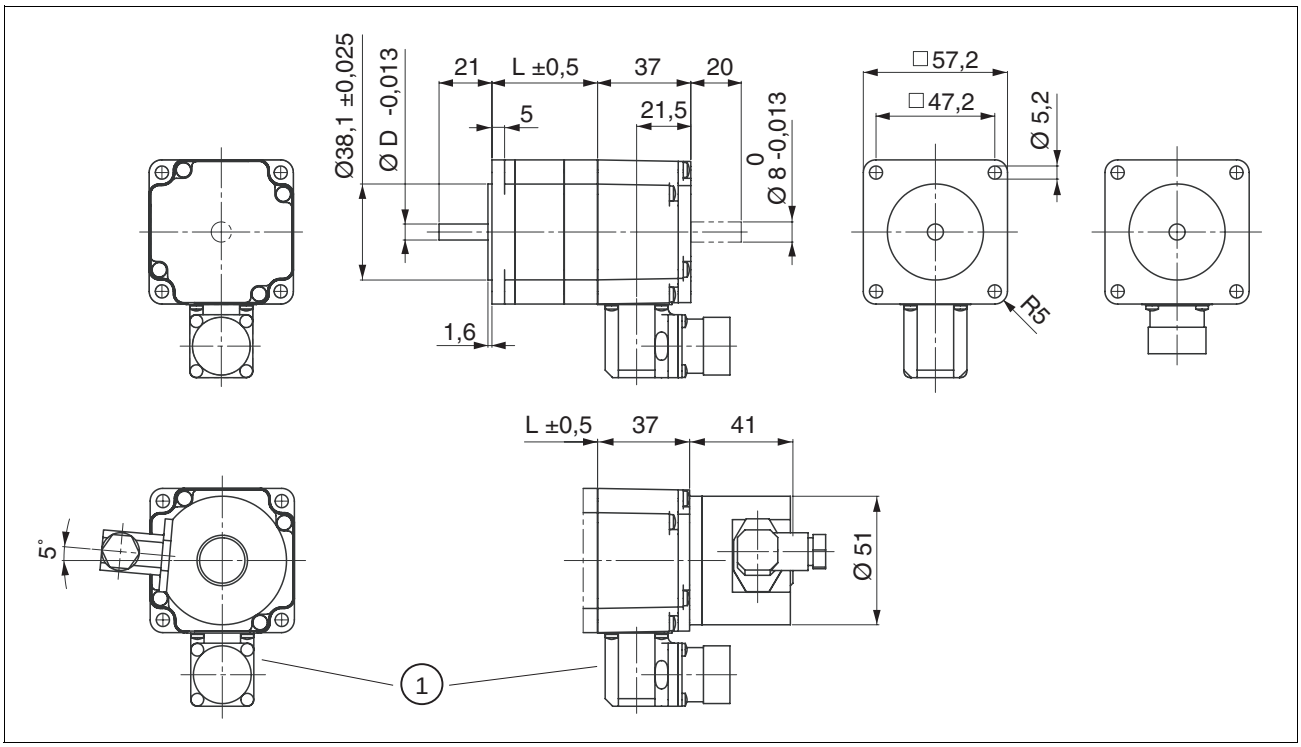

Figure 3.3 Dimensional drawing of VRDM 36x in connector type without encoder

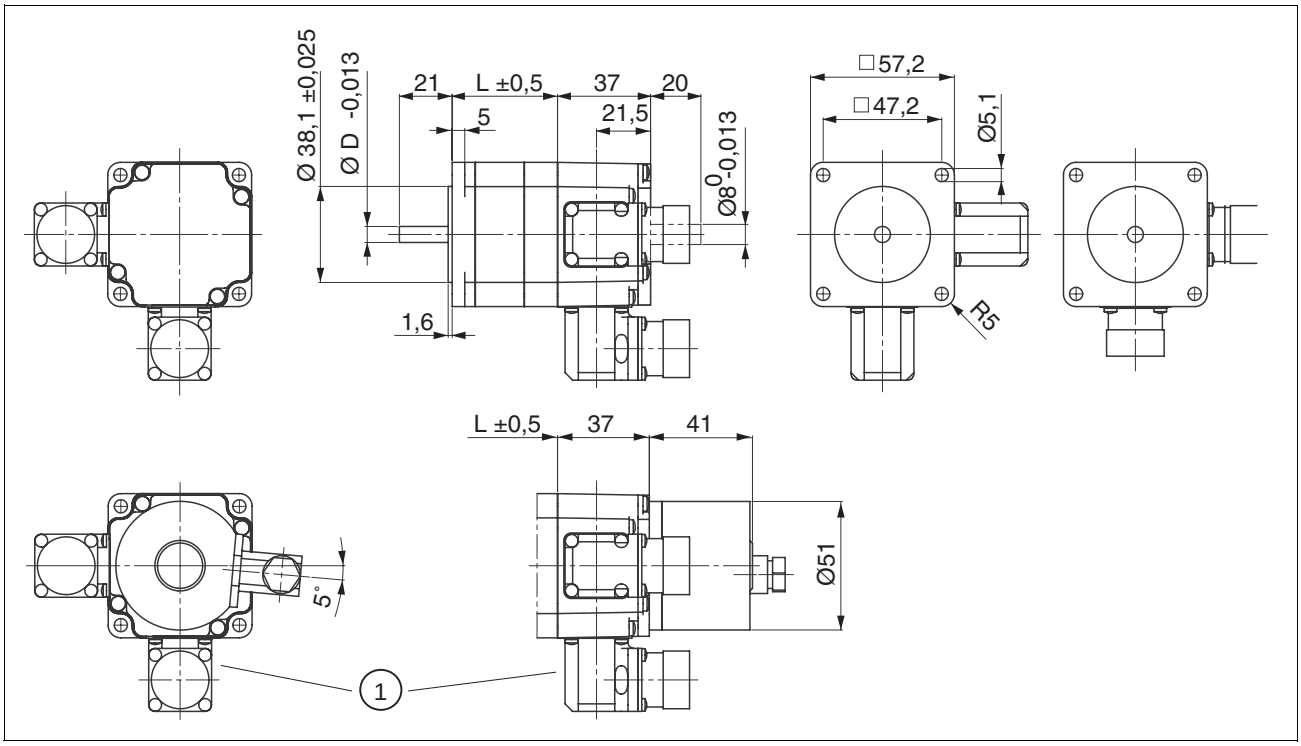

Figure 3.4 Dimensional drawing of VRDM 36x in connector type with encoder

0098441113309, V1.00, 02.2006

3.6.5 Characteristic curves of VRDM 36x

3.6.5.1 Characteristic curves of VRDM 364

VRDM 364 / 50L H

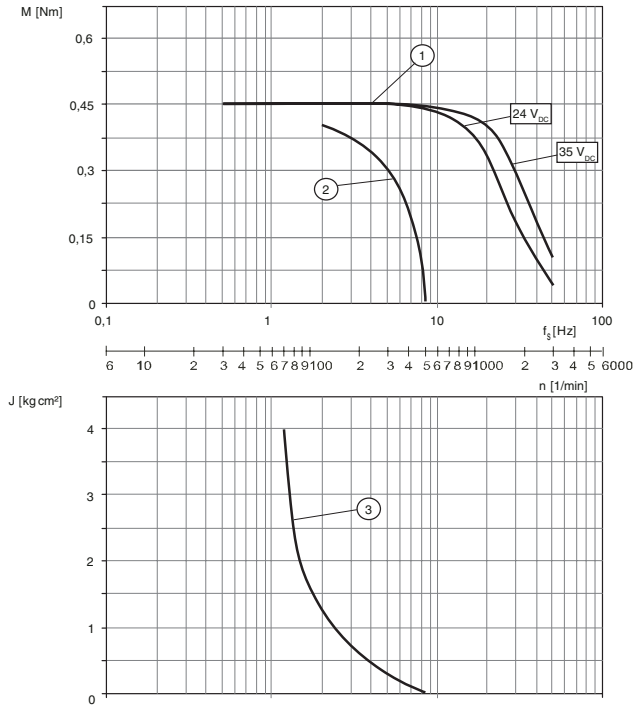

Measurement of characteristic curves with 1000 steps/revolution, nominal voltage U_N and phase current I_N

(1) Pull-out torque
(2) Pull-in torque
(3) Maximum load inertia

0098441113309, V1.00, 02.2006

3.6.5.2 Characteristic curves of VRDM 366

VRDM 366 / 50L H

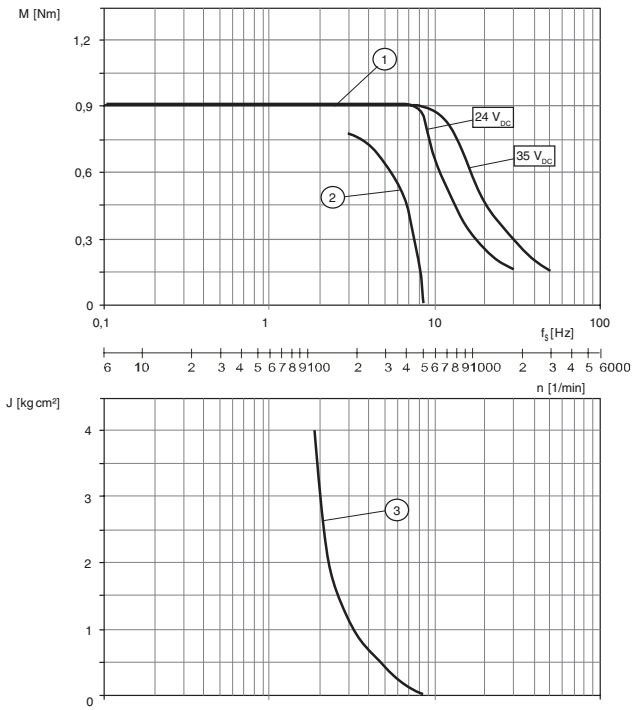

VRDM 366 / 50L N

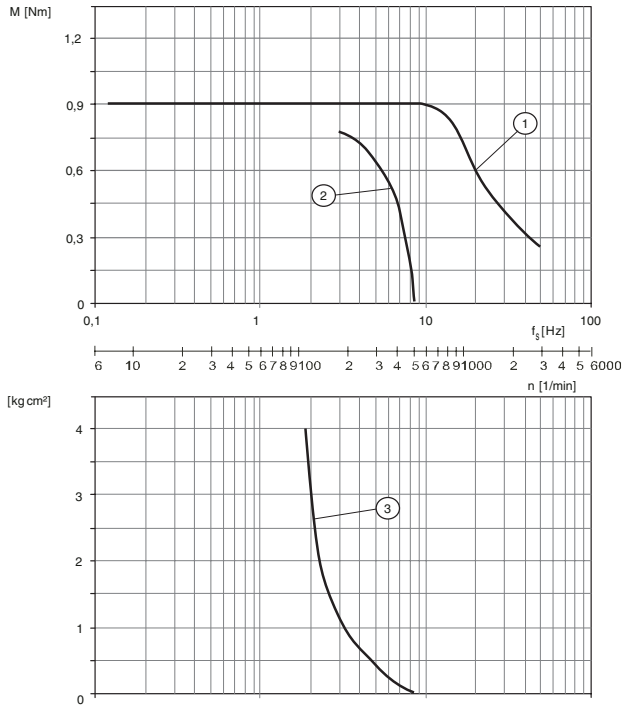

Measurement of characteristic curves with 1000 steps/revolution, nominal voltage U_N and phase current I_N

(1) Pull-out torque
(2) Pull-in torque
(3) Maximum load inertia

0098441113309, V1.00, 02.2006

3.6.5.3 Characteristic curves of VRDM 368

VRDM 368 / 50L H

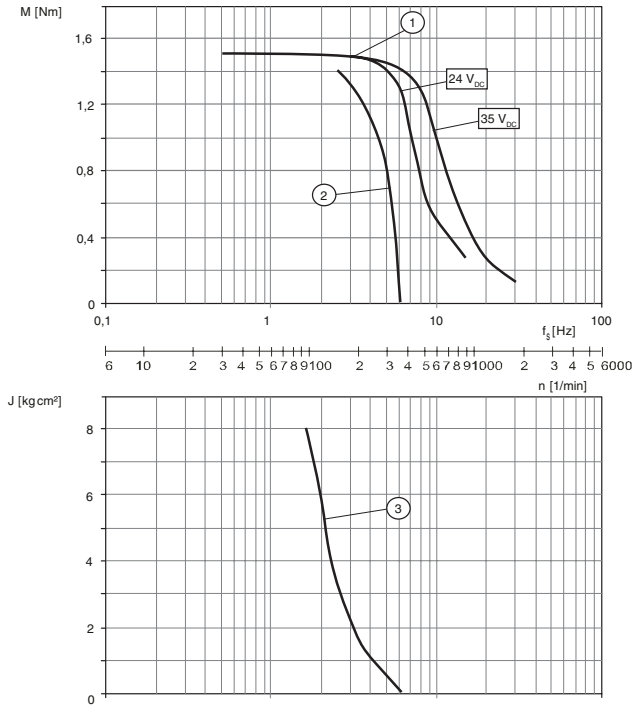

VRDM 368 / 50L N + W

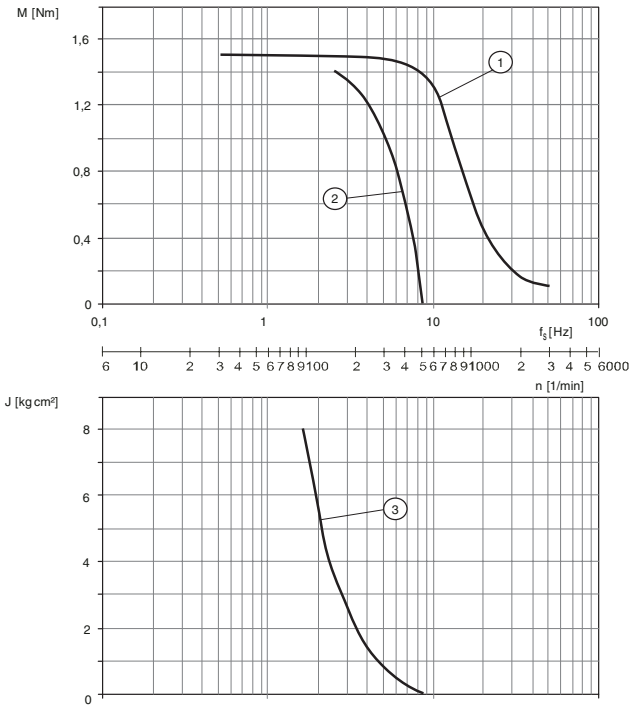

Measurement of characteristic curves with 1000 steps/revolution, nominal voltage U_N and phase current I_N

(1) Pull-out torque
(2) Pull-in torque
(3) Maximum load inertia

0098441113309, V1.00, 02.2006

3.7 VRDM 39x

The stepper motors of the VRDM 39x series are manufactured as the VRDM 397, VRDM 3910 and VRDM 3913 types. The edge length of the flange is 85 mm. The terms and formulas listed in the following tables correspond to DIN 42021 Part 2.

3.7.1 Motor-specific data of VRDM 39x

Motor type		**VRDM 397**			**VRDM 3910**			**VRDM 3913**		
winding		**H**	**N**	**W**	**H**	**N**	**W**	**H**	**N**	**W**
Max. supply voltage U_{max}	V_{AC}	25	92	230	25	92	230	25	92	230
Max. voltage against PE	V_{AC}	32	125	250	32	125	250	32	125	250
Nominal voltage of DC bus U_N	V_{DC}	24 / 35	130	325	24 / 35	130	325	24 / 35	130	325
Nominal torque M_N	Nm	1.7	2	2	3.7	4	4	5	6	6
Holding torque M_H	Nm	1.92	2.26	2.26	4.18	4.52	4.52	5.65	6.78	6.78
Rotor inertia J_R	kgcm²	1.1	1.1	1.1	2.2	2.2	2.2	3.3	3.3	3.3
Steps per revolution [1]		200 / 400 / 500 / 1000 / 2000 / 4000 / 5000 / 10000								
Step angleα	°	1.8 / 0.9 / 0.72 / 0.36 / 0.18 / 0.09 / 0.072 / 0.036								
Systematic angular tolerance $\Delta\alpha_s$ [2]	’	±6	±6	±6	±6	±6	±6	±6	±6	±6
Max. starting frequency f_{Aom}	kHz	4.6	5.3	5.3	4.8	5.3	5.3	4.5	5.3	5.3
Motor phase current I_N	A_{rms}	5.8	4.4	1.75	5.8	5	2	5.8	5	2.25
Winding resistance R_W	Ω	0.35	1	6.5	0.55	1.2	5.8	0.63	1.3	6.5
Rate-of-current rise time constant t	ms	~7	~7	~7	~9	~9	~9	~10	~10	~10
Frame m [3]	kg	2.1	2.1	2.1	3.2	3.2	3.2	4.3	4.3	4.3

1) depending on the controller
2) Measured at 1000 steps/revolution, unit: angular minutes
3) Earth of motor type with cable retaining screws or connector

0098441113309, V1.00, 02.2006

3.7.2 Shaft load of VRDM 39x

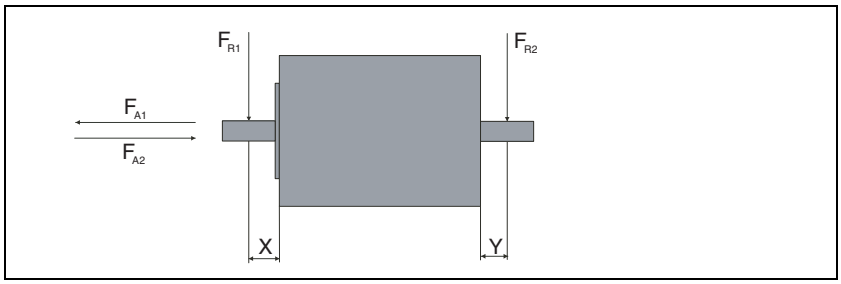

The following conditions apply:

- speed n = 600 1/min
- ambient temperature = 40°C (ca. 80°C storage temperature)
- 100% Duty Cycle at rated torque

When these conditions apply the maximum forces shown in the table below can act on the shaft, but not simultaneously:

Motor type		VRDM 397	VRDM 3910	VRDM 3913
Max. radial force of 1st shaft end F_{R1} 1)	N	100	100	110
Max. radial force of 2nd shaft end (optional) F_{R2} 1)	N	50 / 75 2)	50 / 75 2)	50 / 75 2)
Max. axial force tension F_{A1}	N	175	175	175
Max. axial force pressure F_{A2}	N	30	30	30
Nominal bearing life L_{10h} 3)	h	20000	20000	20000

1) Point of attack of radial force: X = Y = 15mm distance from flange
2) 1. Value: motors with terminal box, connector or encoder; 2. Value: motors with braided wires
3) Operating hours at a failure probability of 10%

3.7.3 Type code of VRDM 39x

0098441113309, V1.00, 02.2006

Example:	**VRDM**	**3**	**9**	**10**	**/**	**50**	**L**	**H**	**C**	**E**	**O**	**IP41**	**3**	**5**	**DO**	**O**	**OO**	**2**	**B**	**B**	**O**	**OOO**
Phase count 3	VRDM	**3**	9	10	/	50	L	H	C	E	O	IP41	3	5	DO	O	OO	2	B	B	O	OOO
Size (flange) 9 = 85 mm	VRDM	3	**9**	10	/	50	L	H	C	E	O	IP41	3	5	DO	O	OO	2	B	B	O	OOO
Motor length 7 = 68 mm 10 = 98 mm 13 = 128 mm	VRDM	3	9	**10**	/	50	L	H	C	E	O	IP41	3	5	DO	O	OO	2	B	B	O	OOO
Pole pair count 50	VRDM	3	9	10	/	**50**	L	H	C	E	O	IP41	3	5	DO	O	OO	2	B	B	B	OOO
Rotor L = laminated rotor plate	VRDM	3	9	10	/	50	**L**	H	C	E	O	IP41	3	5	DO	O	OO	2	B	B	O	OOO
Maximum voltage H = 25 V_{AC} (35 V_{DC}) N = 92 V_{AC} (130 V_{DC}) W = 230 V_{AC} (325 V_{DC})	VRDM	3	9	10	/	50	L	**H**	C	E	O	IP41	3	5	DO	O	OO	2	B	B	B	OOO
Connection type (motor/ encoder) A = braided wires B = terminal box C = connector	VRDM	3	9	10	/	50	L	H	**C**	E	O	IP41	3	5	DO	O	OO	2	B	B	O	OOO
Position capture E = encoder (1000 Inc./rev.) O = without encoder	VRDM	3	9	10	/	50	L	H	C	**E**	O	IP41	3	5	DO	O	OO	2	B	B	O	OOO
holding brake B = brake O = without brake	VRDM	3	9	10	/	50	L	H	C	E	**O**	IP41	3	5	DO	O	OO	2	B	B	O	OOO
Degree of protection IP41 IP56	VRDM	3	9	10	/	50	L	H	C	E	O	**IP41**	3	5	DO	O	OO	2	B	B	O	OOO
Gearbox type O = without gearbox 3 = PLE 80 B = PLS 90	VRDM	3	9	10	/	50	L	H	C	E	O	IP41	**3**	5	DO	O	OO	2	B	B	O	OOO
Gear ratio O = without gearbox 3 = 3:1 5 = 5:1 8 = 8:1	VRDM	3	9	10	/	50	L	H	C	E	O	IP41	3	**5**	DO	O	OO	2	B	B	O	OOO
Shaft diameter D9 = 9.5 mm D2 = 12 mm D4 = 14 mm DO = motor with gearbox	VRDM	3	9	10	/	50	L	H	C	E	O	IP41	3	5	**DO**	O	OO	2	B	B	O	OOO
Shaft modelfront O = smooth shaft or with gearbox K = disc spring, DIN 6888	VRDM	3	9	10	/	50	L	H	C	E	O	IP41	3	5	DO	**O**	OO	2	B	B	O	OOO
Centring collar 60 = 60 mm 73 = 73 mm 00 = motor with gearbox	VRDM	3	9	10	/	50	L	H	C	E	O	IP41	3	5	DO	O	**OO**	2	B	B	O	OOO
Second shaft O = without 2 = with	VRDM	3	9	10	/	50	L	H	C	E	O	IP41	3	5	DO	O	OO	**2**	B	B	O	OOO

0098441113309, V1.00, 02.2006

Example:	**VRDM**	**3**	**9**	**10**	**/**	**50**	**L**	**H**	**C**	**E**	**O**	**IP41**	**3**	**5**	**DO**	**O**	**OO**	**2**	**B**	**B**	**O**	**OOO**
Connection direction motor plug O = without, L = left, R = right B = rear, F = front, S = straight	VRDM	3	9	10	/	50	L	H	C	E	O	IP41	3	5	DO	O	OO	2	**B**	B	O	OOO
Connection direction encoder plug O = without, L = left, R = right B = rear, F = front, S = straight	VRDM	3	9	10	/	50	L	H	C	E	O	IP41	3	5	DO	O	OO	2	B	**B**	O	OOO
Wire output O = without S = side B = rear	VRDM	3	9	10	/	50	L	H	C	E	O	IP41	3	5	DO	O	OO	2	B	B	**O**	OOO
Wire length OOO = none XXX = XXX mm (max. 400)	VRDM	3	9	10	/	50	L	H	C	E	O	IP41	3	5	DO	O	OO	2	B	B	O	**OOO**

0098441113309, V1.00, 02.2006

3.7.4 Dimensional drawing of VRDM 39x

The following applies for the dimensional drawings:

(1) motor with holding brake

	L	D		N	
VRDM 397	67.5	9.5	12	60	73
VRDM 3910	97.5	9.5	12	60	73
VRDM 3913	127.5	14	14	60	73

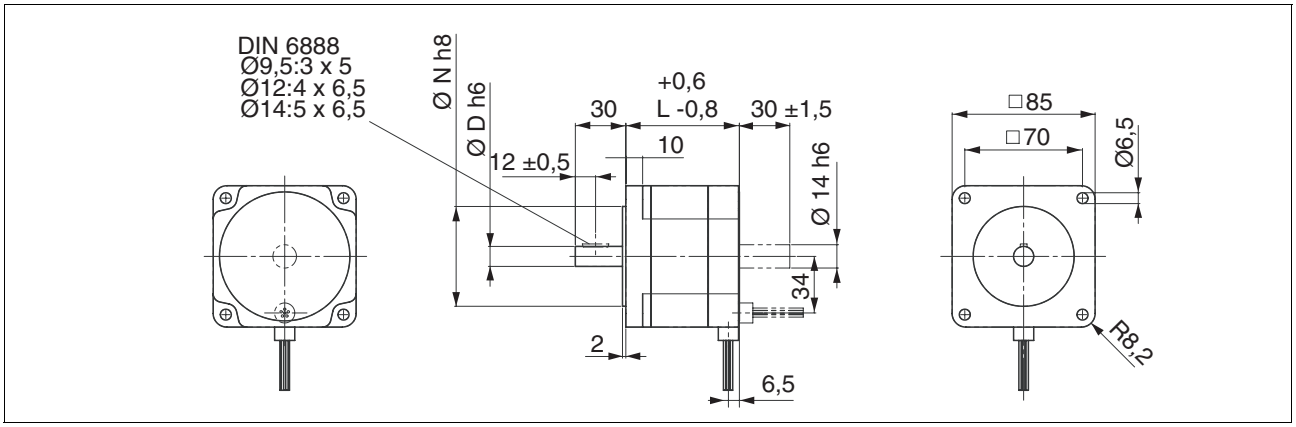

Figure 3.5 Dimensional drawing of VRDM 39x in braided wire type

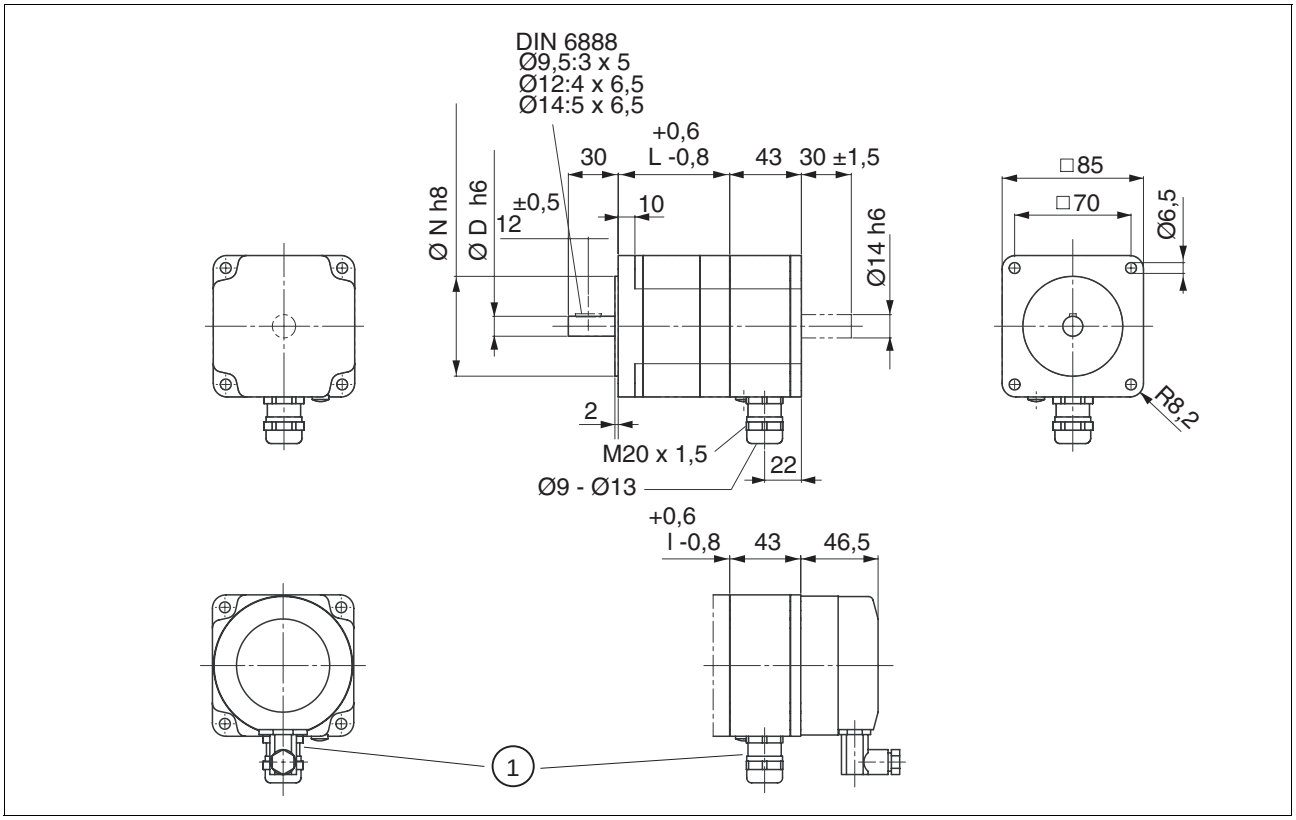

Figure 3.6 Dimensional drawing of VRDM 39x in terminal type

0098441113309, V1.00, 02.2006

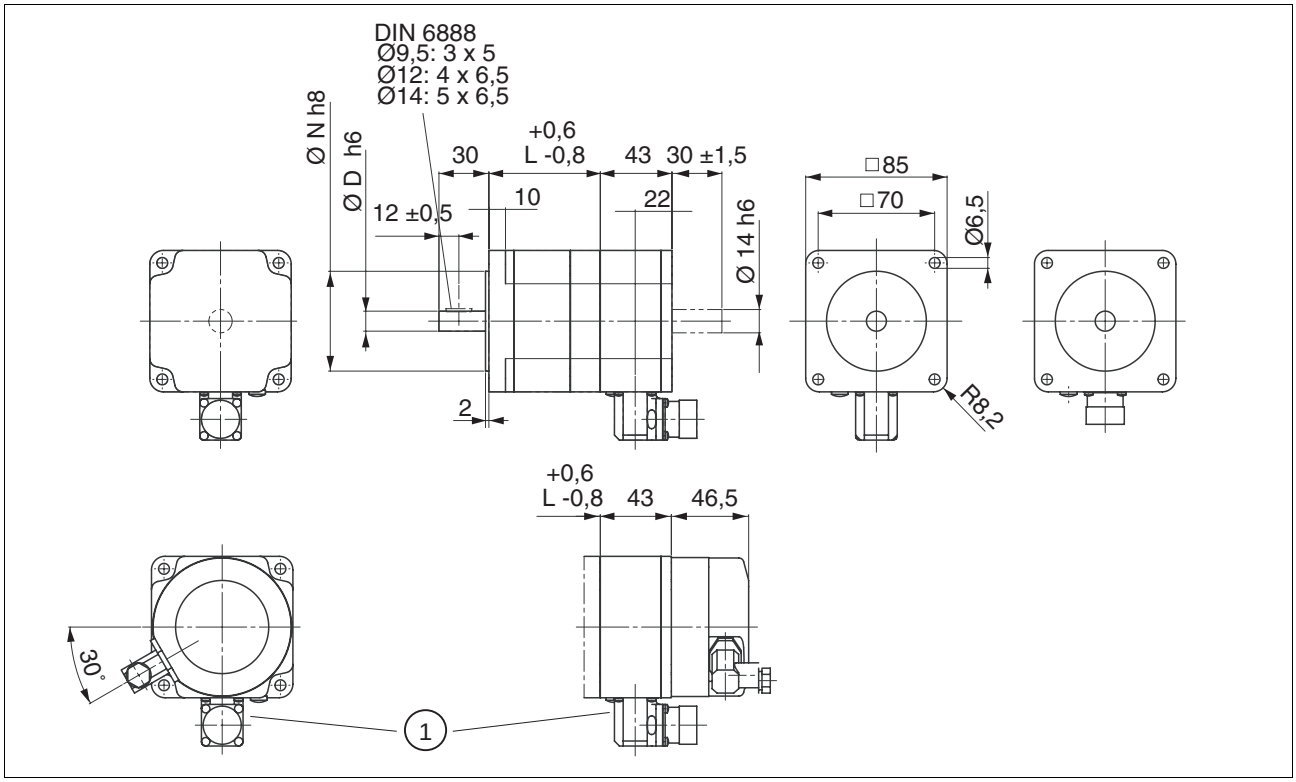

Figure 3.7 Dimensional drawing of VRDM 39x in connector type without encoder

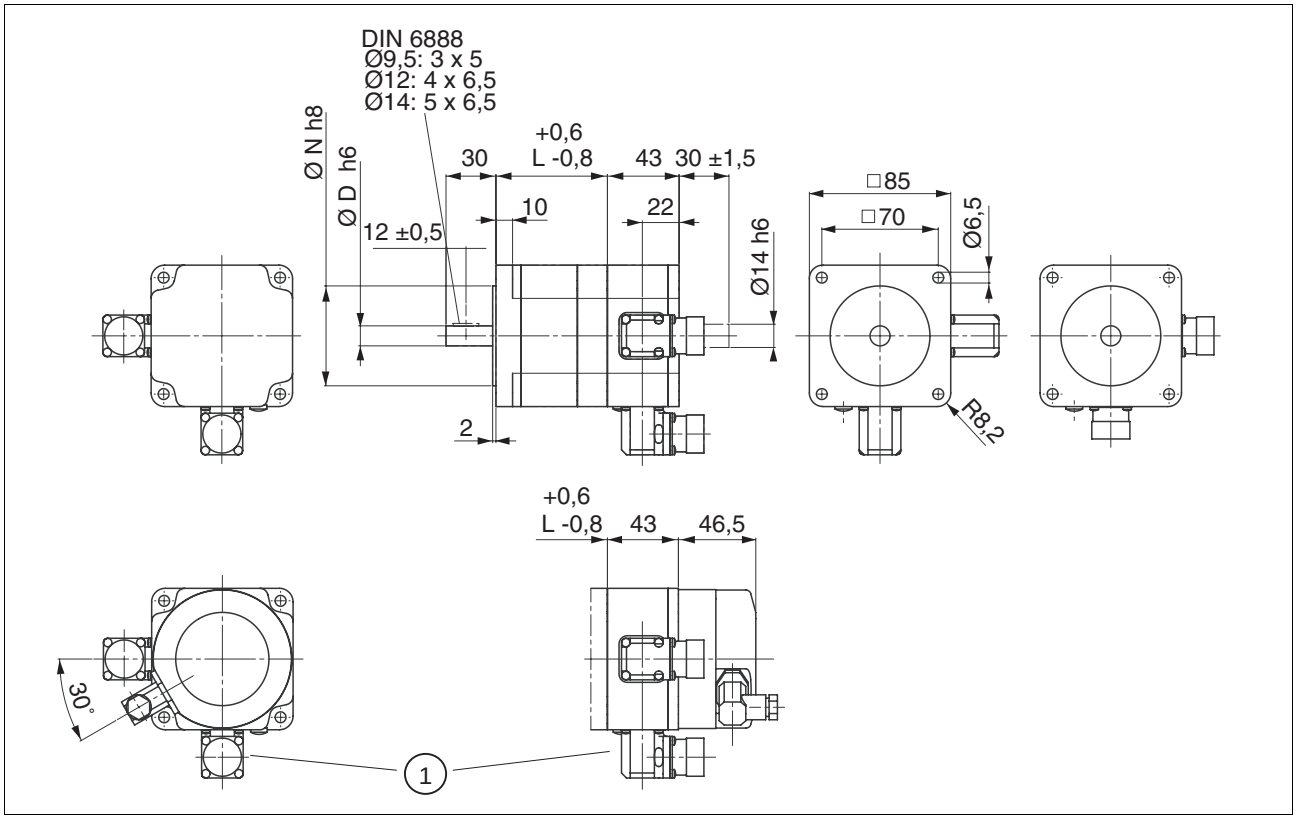

Figure 3.8 Dimensional drawing of VRDM 39x in connector type with encoder

0098441113309, V1.00, 02.2006

3.7.5 Characteristic curves of VRDM 39x

3.7.5.1 Characteristic curves of VRDM 397

VRDM 397 / 50L H

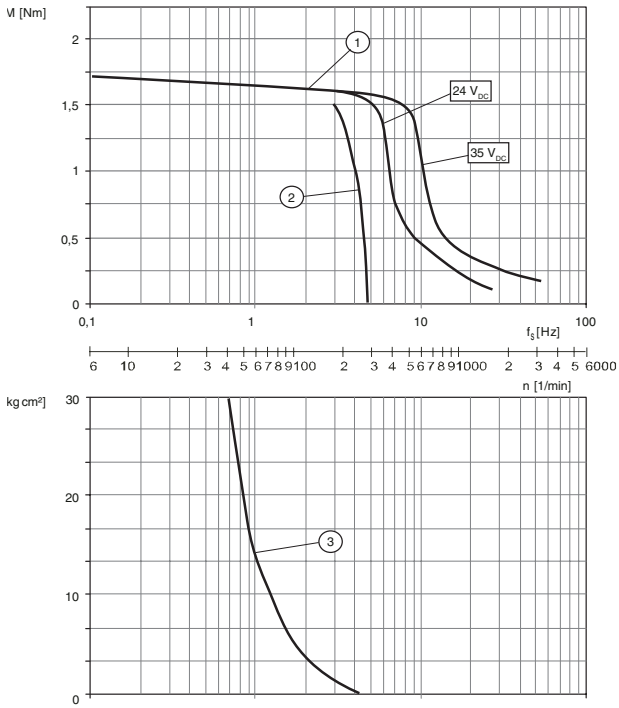

VRDM 397 / 50L N+ W

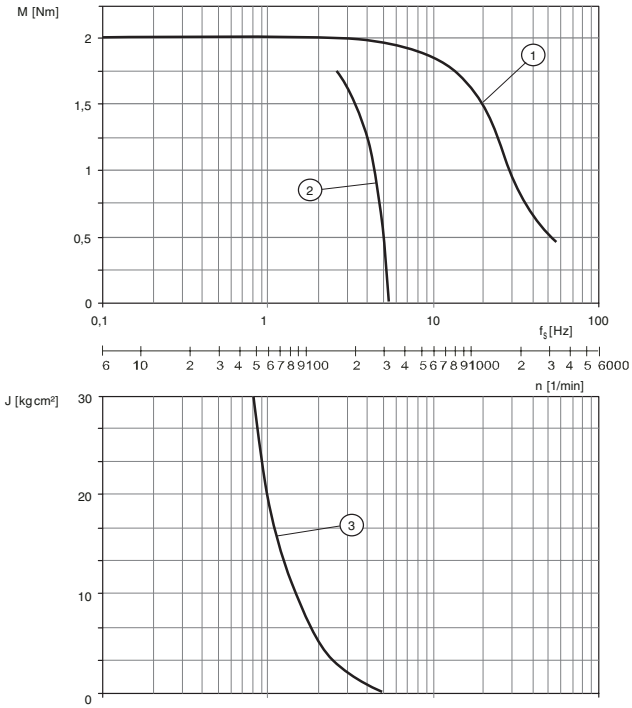

Measurement of characteristic curves with 1000 steps/revolution, nominal voltage U_N and phase current I_N

(1) Pull-out torque
(2) Pull-in torque
(3) Maximum load inertia

0098441113309, V1.00, 02.2006

3.7.5.2 Characteristic curves of VRDM 3910

VRDM 3910 / 50L H

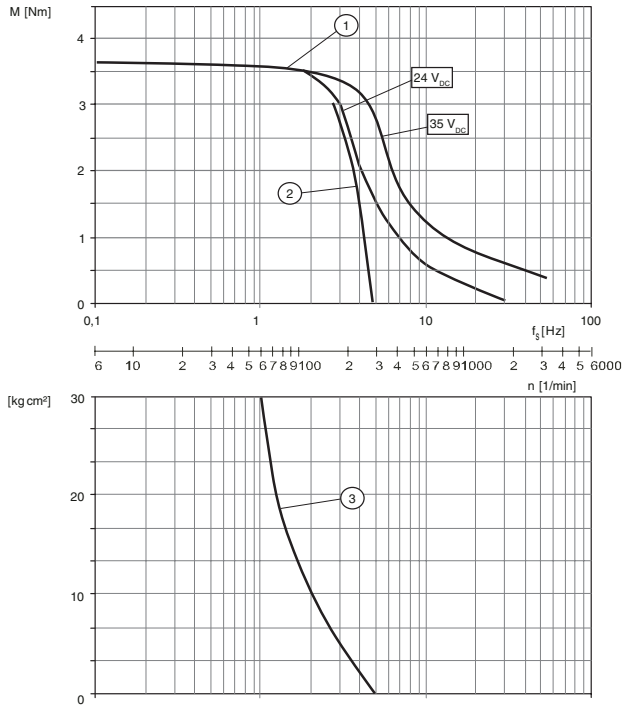

VRDM 3910 / 50L N + W

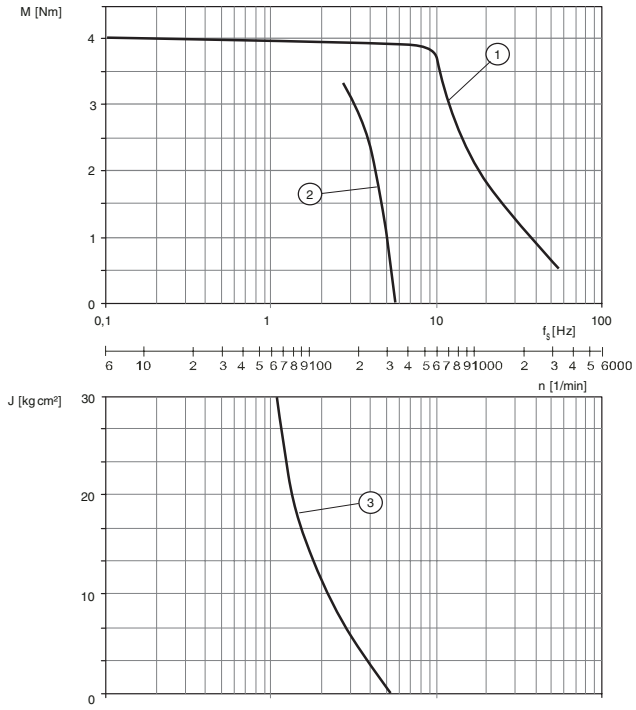

Measurement of characteristic curves with 1000 steps/revolution, nominal voltage U_N and phase current I_N

(1) Pull-out torque
(2) Pull-in torque
(3) Maximum load inertia

0098441113309, V1.00, 02.2006

3.7.5.3 Characteristic curves of VRDM 3913

VRDM 3913 / 50L H

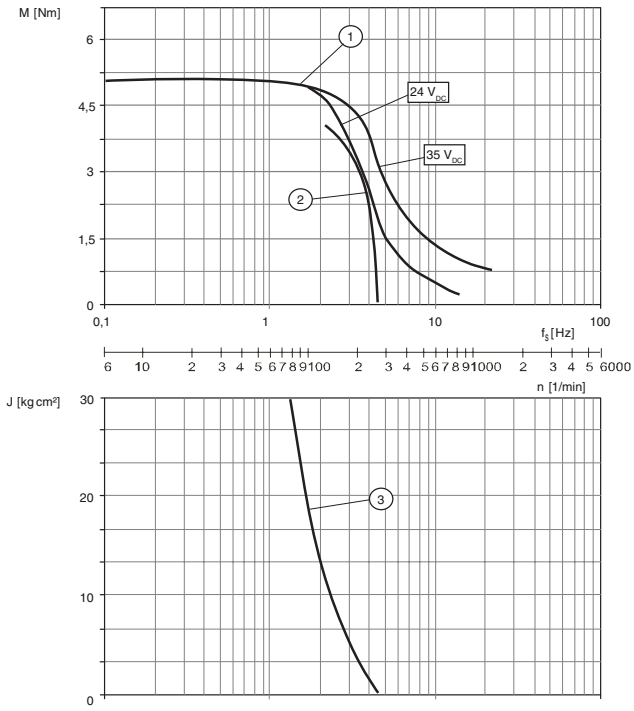

VRDM 3913 / 50 N + W

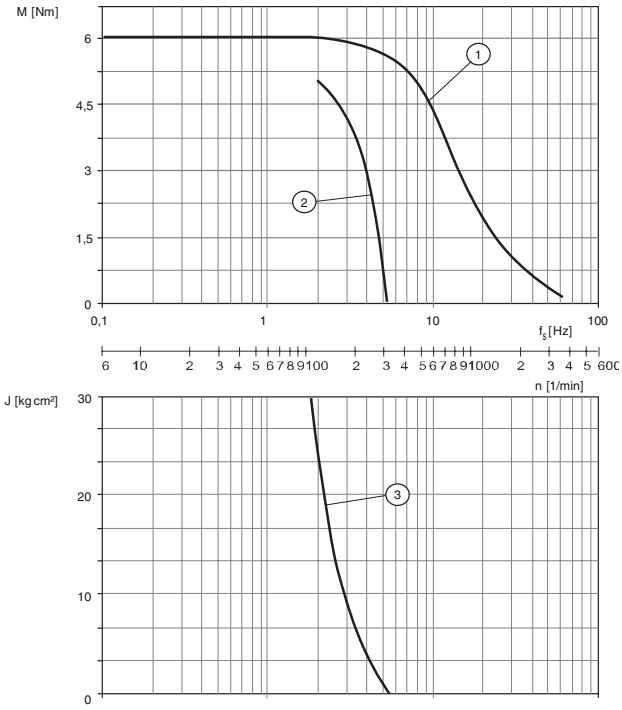

Measurement of characteristic curves with 1000 steps/revolution, nominal voltage U_N and phase current I_N

(1) Pull-out torque
(2) Pull-in torque
(3) Maximum load inertia

0098441113309, V1.00, 02.2006

3.8 VRDM 311x

The stepper motors of the VRDM 311x series are manufactured as the VRDM 31117 and VRDM 31122 types. The edge length of the flange is 110 mm. The terms and formulas listed in the following tables correspond to DIN 42021 Part 2.

3.8.1 Motor-specific data of VRDM 311x

Motor type		**VRDM 31117**	**VRDM 31122**
winding		**W**	**W**
Max. supply voltage U_{max}	V_{AC}	230	230
Max. voltage against PE	V_{AC}	250	250
Nominal voltage of DC bus U_N	V_{DC}	325	325
Nominal torque M_N	Nm	12	16.5
Holding torque M_H	Nm	13.5	19.7
Rotor inertia J_R	kgcm²	10.5	16
Steps per revolution [1)]		200 / 400 / 500 / 1000 / 2000 / 4000 / 5000 / 10000	
Step angleα	°	1.8 / 0.9 / 0.72 / 0.36 / 0.18 / 0.09 / 0.072 / 0.036	
Systematic angular tolerance $\Delta\alpha_s$ [2)]	’	±6	±6
Max. starting frequency f_{Aom}	kHz	4.7	4.7
Motor phase current I_N	A_{rms}	4.1	4.75
Winding resistance R_W	Ω	1.8	1.9
Rate-of-current rise time constant t	ms	~22	~22
Frame m [3)]	kg	8.2	11.2

1) depending on the controller
2) Measured at 1000 steps/revolution, unit: angular minutes
3) Earth of motor type with cable retaining screws or connector

0098441113309, V1.00, 02.2006

3.8.2 Shaft load of VRDM 311x

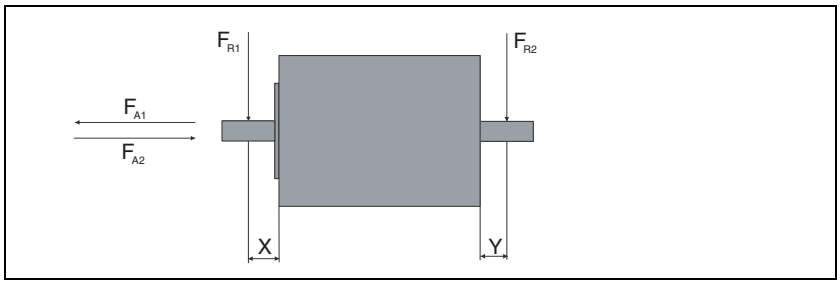

The following conditions apply:

- speed n = 600 1/min
- ambient temperature = 40°C (ca. 80°C storage temperature)
- 100% Duty Cycle at rated torque

When these conditions apply the maximum forces shown in the table below can act on the shaft, but not simultaneously:

Motor type		VRDM 31117	VRDM 31122
Max. radial force of 1st shaft end F_{R1} 1)	N	300	300
Max. radial force of 2nd shaft end (optional) F_{R2} 1)	N	150	150
Max. axial force tension F_{A1}	N	330	330
Max. axial force pressure F_{A2}	N	60	60
Nominal bearing life L_{10h} 2)	h	20000	20000

1) Point of attack of radial force: X = Y = 20mm distance from flange
2) Operating hours at a failure probability of 10%

3.8.3 Type code of VRDM 311x

0098441113309, V1.00, 02.2006

Example:	**VRDM**	**3**	**11**	**17**	**/**	**50**	**L**	**W**	**C**	**E**	**O**	**IP41**	**4**	**5**	**DO**	**O**	**OO**	**2**	**B**	**B**	**O**	**OOO**
Phase count 3	VRDM	**3**	11	17	/	50	L	W	C	E	O	IP41	4	5	DO	O	OO	2	B	B	O	OOO
Size (flange) 11 = 110 mm	VRDM	3	**11**	17	/	50	L	W	C	E	O	IP41	4	5	DO	O	OO	2	B	B	O	OOO
Length 17 = 180 mm 22 = 228 mm	VRDM	3	11	**17**	/	50	L	W	C	E	O	IP41	4	5	DO	O	OO	2	B	B	O	OOO
Pole pair count 50	VRDM	3	11	17	/	**50**	L	W	C	E	O	IP41	4	5	DO	O	OO	2	B	B	B	OOO
Rotor L = laminated rotor plate	VRDM	3	11	17	/	50	**L**	W	C	E	O	IP41	4	5	DO	O	OO	2	B	B	O	OOO
Maximum voltage W = 230 V_{AC} (325 V_{DC})	VRDM	3	11	17	/	50	L	**W**	C	E	O	IP41	4	5	DO	O	OO	2	B	B	B	OOO
Connection type (motor/ encoder) B = terminal box C = connector	VRDM	3	11	17	/	50	L	W	**C**	E	O	IP41	4	5	DO	O	OO	2	B	B	O	OOO
Position capture E = encoder (1000 Inc./rev.) O = without encoder	VRDM	3	11	17	/	50	L	W	C	**E**	O	IP41	4	5	DO	O	OO	2	B	B	O	OOO
holding brake B = brake O = without brake	VRDM	3	11	17	/	50	L	W	C	E	**O**	IP41	4	5	DO	O	OO	2	B	B	O	OOO
Degree of protection IP41 IP56	VRDM	3	11	17	/	50	L	W	C	E	O	**IP41**	4	5	DO	O	OO	2	B	B	O	OOO
Gearbox type O = without gearbox 4 = PLE 120 C = PLS 115	VRDM	3	11	17	/	50	L	W	C	E	O	IP41	**4**	5	DO	O	OO	2	B	B	O	OOO
Gear ratio O = without gearbox 3 = 3:1 5 = 5:1 8 = 8:1	VRDM	3	11	17	/	50	L	W	C	E	O	IP41	4	**5**	DO	O	OO	2	B	B	O	OOO
Shaft diameter D9 = 19 mm DO = motor with gearbox	VRDM	3	11	17	/	50	L	W	C	E	O	IP41	4	5	**DO**	O	OO	2	B	B	O	OOO
Shaft modelfront O = smooth shaft or gearbox K = parallel key, DIN 6885	VRDM	3	11	17	/	50	L	W	C	E	O	IP41	4	5	DO	**O**	OO	2	B	B	O	OOO
Centring collar 56 = 56 mm 00 = motor with gearbox	VRDM	3	11	17	/	50	L	W	C	E	O	IP41	4	5	DO	O	**OO**	2	B	B	O	OOO
Second shaft O = without 2 = with	VRDM	3	11	17	/	50	L	W	C	E	O	IP41	4	5	DO	O	OO	**2**	B	B	O	OOO
Connection direction motor plug O = without, L = left, R = right B = rear, F = front, S = straight	VRDM	3	11	17	/	50	L	W	C	E	O	IP41	4	5	DO	O	OO	2	**B**	B	O	OOO

0098441113309, V1.00, 02.2006

Example:	VRDM	3	11	17	/	50	L	W	C	E	O	IP41	4	5	DO	O	OO	2	B	B	O	OOO
Connection direction encoder plug O = without, L = left, R = right B = rear, F = front, S = straight	VRDM	3	11	17	/	50	L	W	C	E	O	IP41	4	5	DO	O	OO	2	B	**B**	O	OOO
Wire output O = without	VRDM	3	11	17	/	50	L	W	C	E	O	IP41	4	5	DO	O	OO	2	B	B	**O**	OOO
Wire length OOO = none XXX = XXX mm (max. 400)	VRDM	3	11	17	/	50	L	W	C	E	O	IP41	4	5	DO	O	OO	2	B	B	O	**OOO**

0098441113309, V1.00, 02.2006

3.8.4 Dimensional drawing of VRDM 311x

The following applies for the dimensional drawings:

(1) motor with holding brake

	L
VRDM 31117	180
VRDM 31122	228

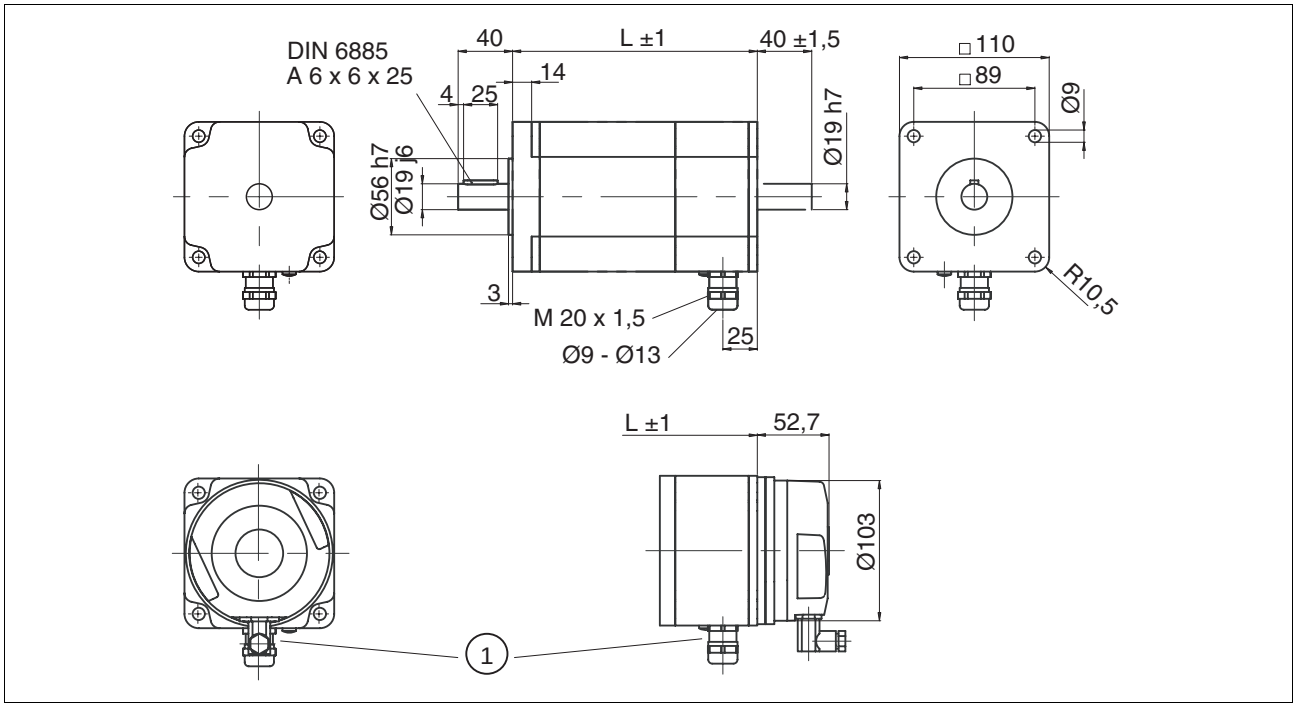

Figure 3.9 Dimensional drawing of VRDM 311x in terminal type

0098441113309, V1.00, 02.2006

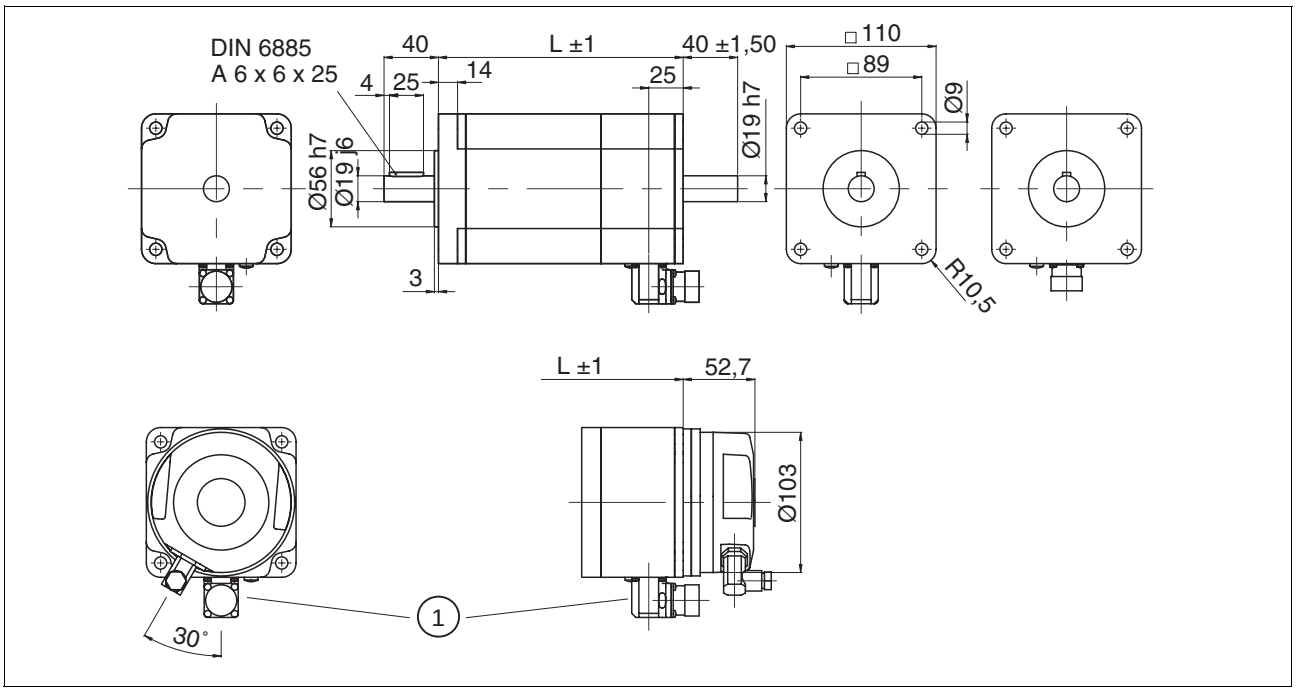

Figure 3.10 Dimensional drawing of VRDM 311x in connector type without encoder

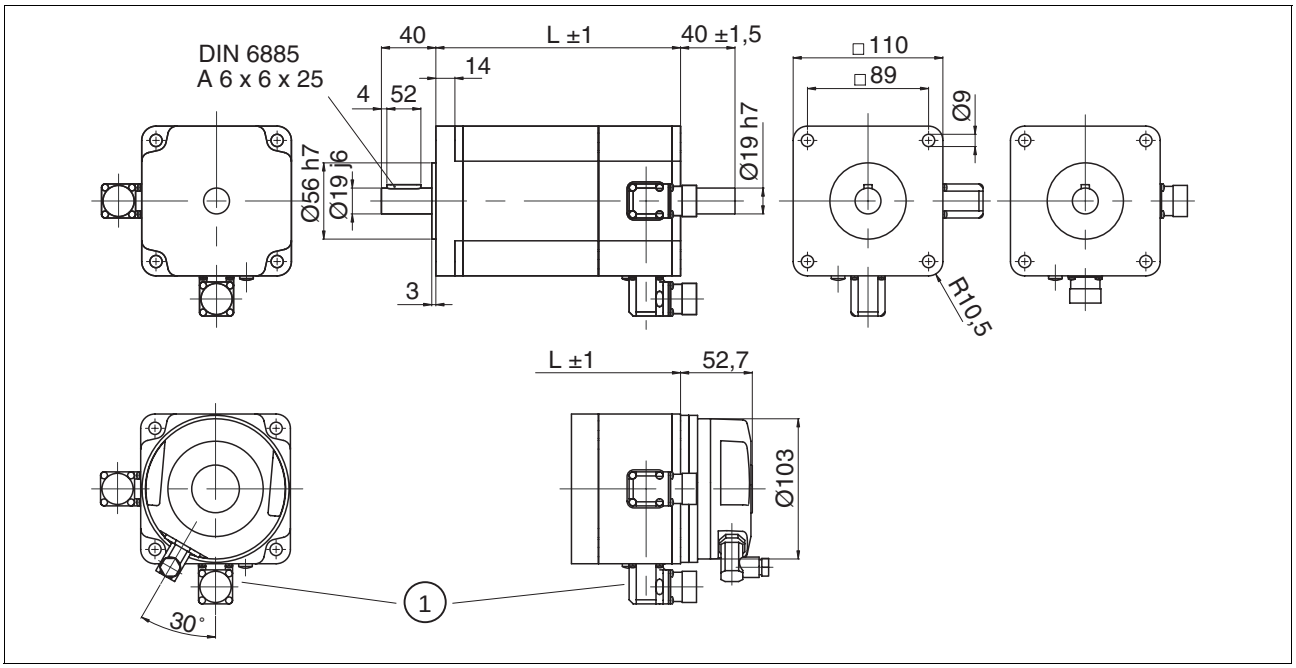

Figure 3.11 Dimensional drawing of VRDM 311x in connector type with encoder

0098441113309, V1.00, 02.2006

3.8.5 Characteristic curves of VRDM 311x

3.8.5.1 Characteristic curves of VRDM 31117

VRDM 31117 / 50L W

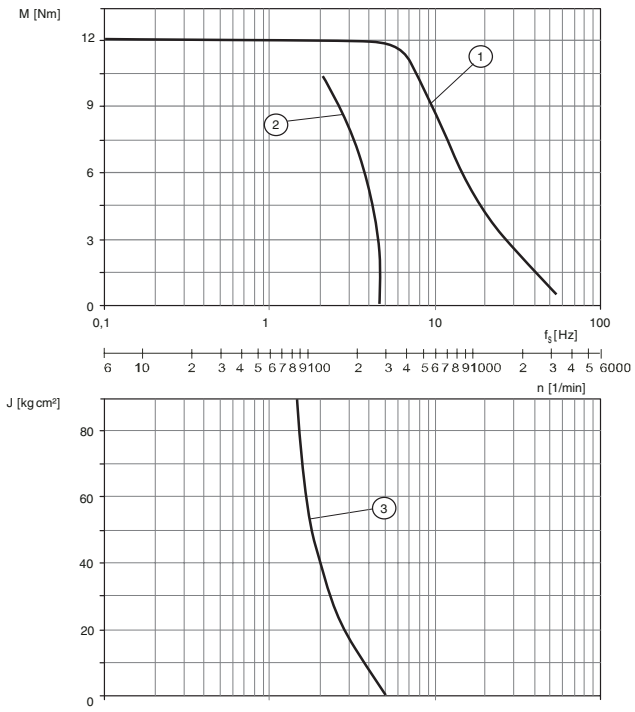

Measurement of characteristic curves with 1000 steps/revolution, nominal voltage U_N and phase current I_N

(1) Pull-out torque
(2) Pull-in torque
(3) Maximum load inertia

0098441113309, V1.00, 02.2006

3.8.5.2 Characteristic curves of VRDM 31122

VRDM 31122 / 50L W

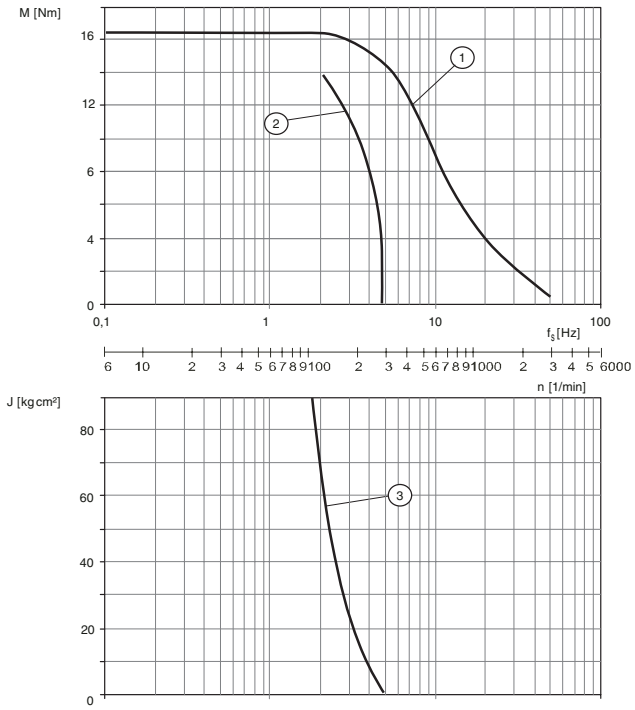

Measurement of characteristic curves with 1000 steps/revolution, nominal voltage U_N and phase current I_N

(1) Pull-out torque
(2) Pull-in torque
(3) Maximum load inertia

0098441113309, V1.00, 02.2006

3.9 Optional holding brake

The holding brake is an electromagnetic spring-pressure brake. It holds the motor axis after the motor current is switched off, including after power failure and EMERGENCY STOP. A holding brake is required particularly for torque loads caused by weight forces, such as occur with vertical axes in handling technology.

The control is described in Chapter 4.4.4 “Holding brake connection“.

The connections are safely isolated from the motor winding.

Technical Data

Holding brake for motor type		**VRDM 36x**	**VRDM 39x**	**VRDM 311x**
Nominal voltage	V	24	24	24
Holding torque	Nm	1	6	16
Electrical pick-up power	W	8	22	28
Moment of inertia	kgcm²	0.015	0.23	0.65
Permissible friction per braking Q [1)]	J	$6*10^6$	$8*10^6$	$13*10^6$
Make time (release brake)	ms	60	30	50
Break time (apply brake)	ms	14	18	20
Mass	kg	ca. 0.5	ca. 1.5	ca. 3

1) The values are applicable for 1...10 brake applications per hour

⚠ WARNING

Violations and system damage by falling loads during start-up.

When the brake is released on stepping motor drives with external forces (vertical axes), the load may fall if the friction is low.

- Restrict the load in these applications to a maximum of 25% of the static holding torque.

Failure to follow these instructions can result in death, serious injury or equipment damage.

Maximum brake power

The permissible brake power for the drive is measured with the formula:

$$Q = \frac{J * n^2}{182{,}4} * \frac{M_2}{M_{dec}}$$

Where:

Q = permissible friction per braking [J],

J = mass moment of inertia [$kgcm^2$],

n = speed of rotation,

M_2 = nominal torque of brake,

M_{dec} = deceleration torque.

0098441113309, V1.00, 02.2006

The holding brake is manufactured by Chr. Mayr GmbH + Co.KG. The "ROBA-Stop" and "ROBA-Stop-M" series holding brakes are used. For the documentation see
http://www.mayr.de.

Make and break time

The switching times are based on the following release circuit:

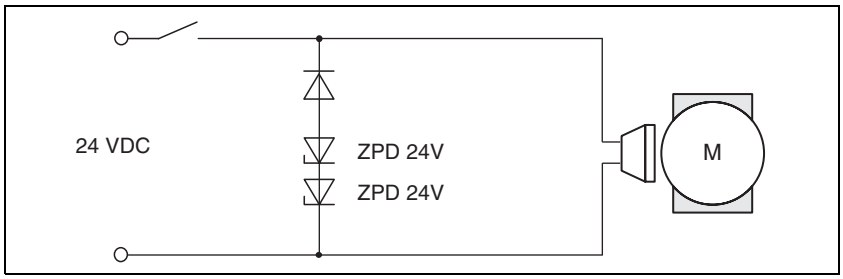

0098441113309, V1.00, 02.2006

3.10 Optional encoder

Three-phase stepper motors can be fitted with an optional encoder. This measuring system reports the actual position if the power controller is fitted with rotary speed monitoring electronics. A temperature sensor is integrated. The connections are safely isolated from the motor winding.

The rotation monitoring compares the setpoint and actual position of the motor and reports an error if the difference exceeds a specified limit (tracking error limit). For example, this enables detection of mechanical overload of the motor.

An encoder can only be used with motors with connector.
A second shaft end or a holding brake can also be used.

Technical Data

Resolution	Pulses/rev.	1000
Indexplus	Pulses/rev.	1
Output		RS 422
Signals		A; B; I
Pulse shape		Rectangular
Supply voltage	V	5 ± 5%
Max. power consumption	A	0.125 (VRDM 36x) 0.15 (VRDM 39x and 311x)
Temperature sensor	°C	100...105 (VRDM 39x and 311x)

Pulse diagram

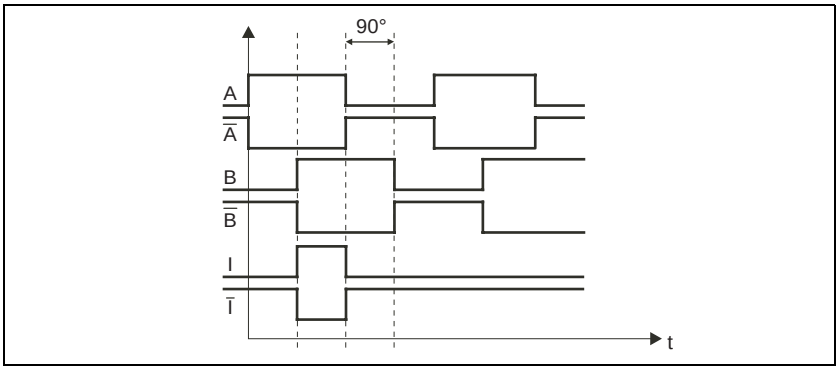

Figure 3.12 Signal curve with motor rotating clockwise.

Temperature monitoring

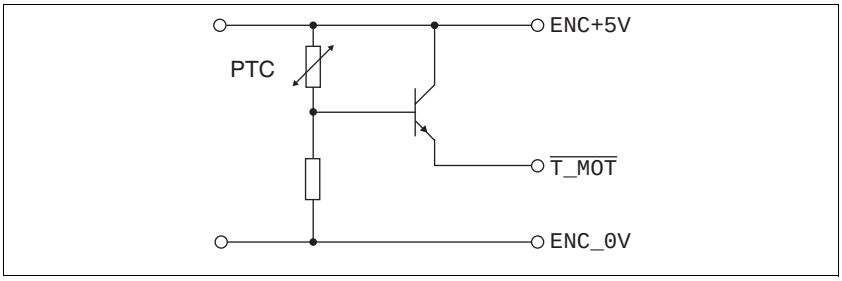

Figure 3.13 Temperature monitoring

0098441113309, V1.00, 02.2006

3.11 Optional gearbox

The stepper motors can also be supplied with attached PLE or PLS gearboxes with gear ratios 3:1, 5:1 or 8:1.

The following table shows the preferred gearboxes for the motors.

Motor type	Gearbox types		
VRDM 36x	PLE 40	PLE 60	PLS 70
VRDM 39x	PLE 80		PLS 90
VRDM 311x	PLE 120		PLS 115

For more information on the layout of motor and gearbox see page 3-38.

If you have any special requirements in addition to the standard range, please contact our technical support.

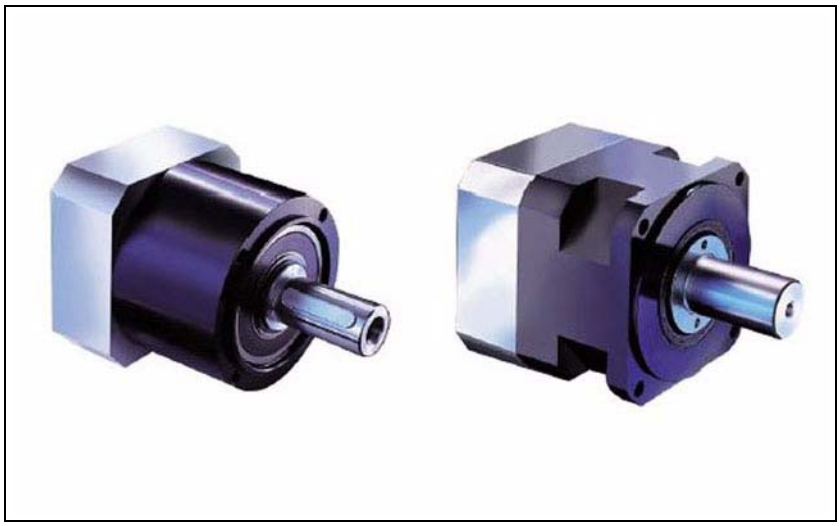

PLE gearbox Economical precision planetary gearbox The PLE planetary gearbox series is the economy alternative to the PLS planetary gearbox series. They have been developed for applications that do not require extremely low torsional play.

- low torsional play
- high output torques
- patented PCS® (precision connection)
- High efficiency (96%, depending on ratio)
- 22 ratios i=3,...,512
- low noise
- high quality (ISO 9001)
- any desired mounting position
- simple motor attachment
- lubricated for life

PLS gearbox High-quality low-play planetary gearbox Customer requirements are met by innovative solutions in the products. The PLS series represents

0098441113309, V1.00, 02.2006

absolute precision and can be found in almost all aspects of mechanical engineering.

- extremely low torsional play (<3')
- high output torques
- patented NIEC® as option (precision connection)
- patented PCS® (precision connection)
- high efficiency (98%, depending on number of ratios)
- honed gear teeth
- 14 ratios i=3,...,100
- low noise (<65dBA)
- high quality (ISO 9001)
- any desired mounting position
- simple motor attachment
- lubricated for life

Technical data of PLE gearbox

PLE gearbox general		
Gear ratios		1
Life time [1]	[h]	10000
Efficiency at full load	[%]	96
Case material		aluminium
Surface		black anodised
Shaft material		C 45
Bearings		roller bearing
Operating temperature [2]	[°C]	-25 to +90, shortly +120
Degree of protection [3]		IP 54
Lubrication		life lubrication

1) Life time with an output shaft speed of 100 1/min and T = 30°C
2) measured at the housing surface
3) at mounting position IM V3 (drive shaft vertical, shaft end up) only protection class IP 41 is guaranteed

Size of PLE		**40**	**60**	**80**	**120**	**160**
Max. radial force [1) 2)]	[N]	200	500	950	2000	6000
Max. axial force [1)]	[N]	200	600	1200	2800	8000
Torsional play	[arcmin]	<24	<16	<9	<8	<6
Max. drive speed	1/min	18000	13000	7000	6500	6500
received drive speed	1/min	4500	4000	4000	3500	3000
Torsion rigidity	Nm/arcmin	1.0	2.3	6	12	38
Weight	[kg]	0.35	0.9	2.1	6.0	18

1) the details are based on min. 20000 h life time with an output shaft speed of 100 1/min and application factor K=100 min and S1-operating mode for electric machines and T=30°C
2) based on the centre of the driven shaft and 50% duty cycle

0098441113309, V1.00, 02.2006

Technical data of PLS gearbox

PLS gearbox general		
Gear ratios		1
Life time [1]	[h]	20000
Efficiency at full load	[%]	98
Case material		aluminium
Surface		black anodised
Shaft material		C 45
Bearings		tapered roller bearings
Operating temperature [2]	[°C]	-25 to +100, shortly +124
Degree of protection [3]		IP 65
Lubrication		Life lubrication

1) Life time with an output shaft speed of 100 1/min and T = 30°C
2) measured at the housing surface
3) at mounting position IM V3 (drive shaft vertical, shaft end up) only protection class IP 41 is guaranteed

Size of PLS		70	90	115	142
Max. radial force [1] [2]	[N]	3300	4300	4800	9000
Max. axial force [1]	[N]	4700	6400	8000	15000
Torsional play	[arcmin]	<3	<3	<3	<3
Max. drive speed	1/min	14000	10000	8500	6500
received drive speed	1/min	5000	4500	4000	3000
Torsion rigidity	Nm/arcmin	6	9	20	44
Weight	[kg]	3.0	4.3	9.0	15.4

1) the details are based on min. 20000 h life time with an output shaft speed of 100 1/min and application factor K=100 min and S1-operating mode for electric machines and T=30°C
2) based on the centre of the driven shaft and 50% duty cycle

0098441113309, V1.00, 02.2006

3.11.1 Assignment of motor-gearbox

⚠ CAUTION

The gearbox can be destroyed by overload.

Exceeding the allowable torques will cause accelerated wear, shaft breakage or blocking.

- Do not exceed the peak gearbox torque in any operating status.
- Limit the motor torque if there is a danger of destruction of the gearbox by peak torques.
- Limit the torque in short-time operation (e.g. in an EMERGENCY STOP situation) to twice the continuous gearbox output torque M_{d2}

Failure to follow these instructions can result in injury or equipment damage.

The stepper motors can be combined with the standard gearboxes for your application. The following tables show the motor and gearbox combinations.

Tables

In the following tables the **highlighted** value indicate a limitation of the torque by gearbox or motor. Uneconomical combinations are indicated with x; the gearbox is overdimensioned or underdimensioned. The gearbox output side is described with index 2 (e.g. M_{max2}).

M_{d2} gearbox output torque (continuous torque)

M_{max2} max. output torque (theoretical value, calculated from max. motor torque M_N * gear ratio)

VRDM 36x

	Motor	gear	3:1	3:1	5:1	5:1	8:1	8:1
M_N Nm			M_{d2} Nm	M_{max2} Nm	M_{d2} Nm	M_{max2} Nm	M_{d2} Nm	M_{max2} Nm
0.45	VRDM 364	PLE 40	4.5	**1.35**	6	**2.25**	5	**3.6**
0.9	VRDM 366	PLE 40	4.5	**2.7**	6	**4.5**	**5**	7.2
1.5	VRDM 368	PLE 40	4.5	**4.5**	**6**	7.5	**5**	12
0.45	VRDM 364	PLE 60	12	**1.35**	16	**2.25**	15	**3.6**
0.9	VRDM 366	PLE 60	12	**2.7**	16	**4.5**	15	**7.2**
1.5	VRDM 368	PLE 60	12	**4.5**	16	**7.5**	15	**12**
0.45	VRDM 364	PLS 70	30	**1.35**	50	**2.25**	37	**3.6**
0.9	VRDM 366	PLS 70	30	**2.7**	50	**4.5**	37	**7.2**
1.5	VRDM 368	PLS 70	30	**4.5**	50	**7.5**	37	**12**

0098441113309, V1.00, 02.2006

VRDM 39x

	Motor	gear	3:1	3:1	5:1	5:1	8:1	8:1
M_N Nm			M_{d2} Nm	M_{max2} Nm	M_{d2} Nm	M_{max2} Nm	M_{d2} Nm	M_{max2} Nm
2	VRDM 397	PLE 80	40	**6**	50	**10**	50	**16**
4	VRDM 3910	PLE 80	40	**12**	50	**20**	50	**32**
6	VRDM 3913	PLE 80	40	**18**	50	**30**	50	**48**
2	VRDM 397	PLS 90	75	**6**	110	**10**	62	**16**
4	VRDM 3910	PLS 90	75	**12**	110	**20**	62	**32**
6	VRDM 3913	PLS 90	75	**18**	110	**30**	62	**48**

VRDM 311x

	Motor	gear	3:1	3:1	5:1	5:1	8:1	8:1
M_N Nm			M_{d2} Nm	M_{max2} Nm	M_{d2} Nm	M_{max2} Nm	M_{d2} Nm	M_{max2} Nm
12	VRDM 31117	PLE 120	80	**36**	110	60	120	**96**
17.5	VRDM 31122	PLE 120	80	**52.5**	110	**87.5**	**120**	140
17.5	VRDM 31122	PLE 160	x	x	x	x	450	**140**
12	VRDM 31117	PLS 115	150	**36**	210	**60**	148	**96**
17.5	VRDM 31122	PLS 115	150	**52.2**	210	**87.5**	148	**140**

0098441113309, V1.00, 02.2006

3.11.2 Dimensional drawings of gearbox

Dimensional drawing of PLE

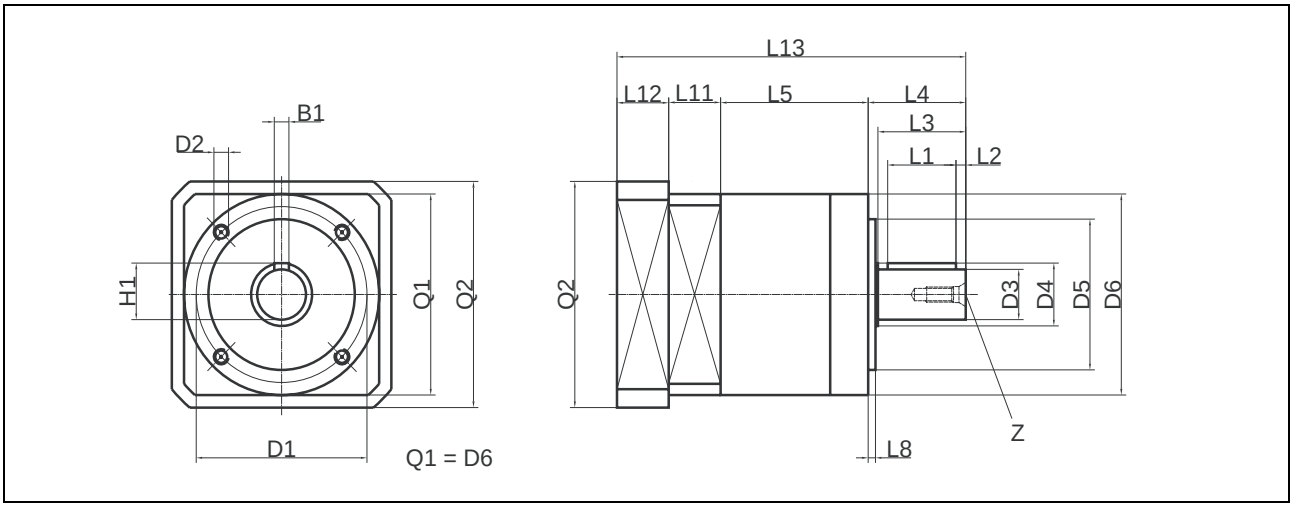

Figure 3.14 Dimensional drawing of PLE gearbox

Size		40	60	80	120	160
Combination possible with		VRDM 36x	VRDM 36x	VRDM 39x	VRDM 311x	VRDM 311x
Flange hole circle	D1	34	52	70	100	145
Screw-in thread	D2	M4 x 6	M5 x 8	M6 x 10	M10 x 16	M12 x 20
Shaft diameter	D3	10	14	20	25	40
Shaft stub	D4	12	17	25	35	55
Centring	D5	26	40	60	80	130
Case diameter	D6	40	60	80	115	160
Adapter flange cross section	Q2	60	60	85	115	140
Centre hole [1)]	Z	M3 x 9	M5 x 12	M6 x 16	M10 x 22	M16 x 36
Parallel key height [2)]	H1	11.2	16	22.5	28	43
Parallel key width [2)]	B1	3	5	6	8	12
Parallel key length [2)]	L1	18	25	28	40	65
Distance from shaft end	L2	2.5	2.5	4	5	8
Shaft length to collar	L3	23	30	36	50	80
Output shaft length	L4	26	35	40	55	87
Case length	L5	39	47	60.5	74	104
Output centring collar	L8	2	3	3	4	5
Intermediate flange length	L11	9.4	8.2	12	25.5	-
Adapter flange length	L12	15	16	21.2	21.8	64.5
Total length	L13	89.4	106.2	133.7	176.3	255.5

1) Centre hole DIN 332, page 2, form DS
2) Parallel key DIN 6885 T1

0098441113309, V1.00, 02.2006

Dimensional drawing of PLS

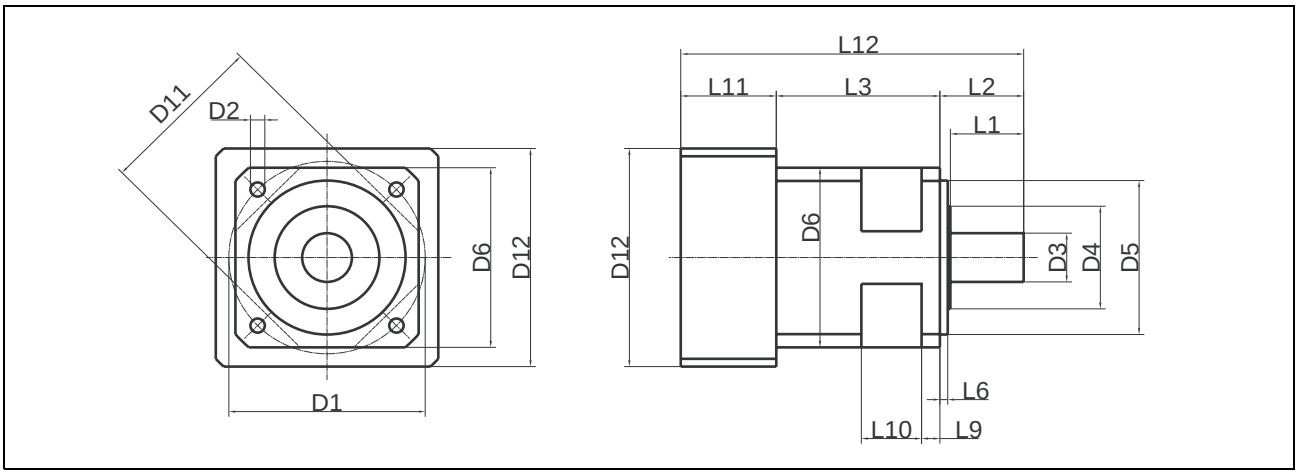

Figure 3.15 Dimensional drawing of PLS gearbox

Size		**70**	**90**	**115**
Combination possible with		VRDM 36x	VRDM 39x	VRDM 311x
Flange hole circle	D1	75	100	130
Screw-in hole	D2	5.5	6.5	8.5
Shaft diameter	D3	19	22	32
Shaft stub	D4	40	50	55
Centring	D5	60	80	110
Gearbox cross section	D6	70	90	115
Cut-out	D11	64	87	115
Motor flange cross section	D12	70	90	115
Shaft length to collar	L1	28	36	58
Output shaft length	L2	32	41.5	64.5
Case length	L3	62.5	69	77.5
Output centring collar	L6	3	3	4
Flange thickness	L9	7	8	14
Cut-out width	L10	23	30	34
Motor flange length	L11	29.5	40	46
Total length	L12	124	150.5	188

0098441113309, V1.00, 02.2006

0098441113309, V1.00, 02.2006

4 Installation

⚠ DANGER

Electric shock, fire or explosion

- Only technicians who are familiar with and understand the contents of this manual and the other relevant manuals are authorised to work on and with this drive system.
- Before working on the drive system:
  - Switch off power to all terminals.
  - Place a sign "DO NOT SWITCH ON" on the switch and lock to prevent its being switched on.
  - Allow the DC bus capacitors to discharge (see power amplifier manual).
  - Check that there is no power.
- Do not short-circuit DC bus or touch unshielded components or screws of the terminals under voltage.
- Install all covers and close the housing doors before applying power.
- The motor generates voltage when the shaft is rotated. Lock the shaft of the motor to prevent rotation before starting work on the drive system.
- AC voltages may jump over unused wires in the motor cable. Isolate unused wires at both ends of the motor cable.
- The system manufacturer is responsible for compliance with all applicable regulations relevant to earthing the drive system. Extend the earth through the motor cable with an additional earth at the motor housing.

Failure to follow these instructions will result in death or serious injury.

⚠ WARNING

Strong electromagnetic fields may cause injury and interference.

Motors can generate strong localised electrical and magnetic fields. This can cause interference in sensitive devices.

- Keep persons with implants such as pacemakers away from the motor.
- Do not place any sensitive devices close to the motor.

Failure to follow these instructions can result in death, serious injury or equipment damage.

0098441113309, V1.00, 02.2006

⚠ WARNING

Danger of injury and damage to system components by unbraked motor.

In case of power failure and faults that cause the power amplifier to switch off, the motor will no longer be actively braked and will run on to a mechanical stop, possibly at high speed.
Overload or faults can cause danger by failure of the holding brake. Incorrect use of the holding brake results in accelerated wear and failure.

- Do not use the internal brake as a service brake.
- If necessary, use a damped mechanical stop or a service brake.
- Check the function of the brake.
- In addition, secure the danger area to prevent entry.
- The brake function must be checked again after frequent EMERGENCY STOP braking operations.

Failure to follow these instructions can result in death, serious injury or equipment damage.

⚠ DANGER

Electric shock from foreign bodies or damage.

Conductive foreign bodies in the product or serious damage can cause accidental energisation.

- Do not use damaged products.
- Prevent foreign bodies such as chips, screws or wire clippings from entering the product.
- Do not use products that contain foreign bodies.

Failure to follow these instructions will result in death or serious injury.

4.1 Before installation...

- Read this manual carefully, particularly the chapter on safety and follow all safety instructions. Familiarise yourself with the power controller manual also. This will minimise the accident risk and prevent damage to the drive and to your system.
- Before assembly obtain all required tools, instruments, testing aids and equipment.
- Check the nameplate to ensure that the motor is actually suitable for the intended application.
- Make sure that the required ambient conditions for operation will be maintained.
- Make sure that the attachment for the motor flange is stable, clean, free of chips and does not oscillate or vibrate. Check that the system side conforms with all dimensions and tolerances.

0098441113309, V1.00, 02.2006

4.2 Electromagnetic compatibility, EMC

⚠ WARNING

Interference with signals and devices may cause injury

Distorted signals can cause unexpected device responses.

- Install the wiring in accordance with the EMC requirements.
- Check compliance with the EMC requirements, particularly in an environment subject to strong interference.

Failure to follow these instructions can result in death, serious injury or equipment damage.

Fully finished motor and sensor system connections in many different lengths are available for the drive solutions. Contact your dealer.

EMC requirement:Run motor cable alone

When planning the cabling make sure that the motor cable is laid separately. It must never by laid in a conduit together with power, control or sensor lines or fastened parallel with cable ties.

EMC requirement:motor and motor sensor cable

Motor leads and motor sensor cables are especially critical signal lines. Use the cables recommended by your local representative. They must be tested for EMC safety and must be suitable for trailing cables.

The motor cable and the motor sensor cable on the drive system must be laid out over a wide area with low resistance on the unit, the switch cabinet output and on the motor.

▶ Lay out motor and motor sensor cable without interruption (do not install switch components) from the motor and sensor to the unit. If a line has to be interrupted, shielded connections and metal casing must be used to prevent interference.

▶ Lay the motor cable at least 20 cm from the signal cable. If the distance is less than this, the motor cable and signal cables must be separated by grounded screening plates.

▶ For long lines equipotential bonding conductors with a suitable cross section must be used

EMC requirement:Mains and motor connection

Great care is required when connecting the mains power and the motor to the power controller, because the danger of uncontrolled overcoupling is greatest here.

▶ Lay mains and motor cable well apart((> 25 cm).

▶ Keep motor cable as short as possible.

▶ Keep unshielded braided wires of the motor cable (e.g. U,V,W) on the device and motor as short as possible.

This is the only way to prevent the formation of active and passive antennas.

EMC requirement:Earth band

Connect the motor to earth with an earth band > 8mm^2 to ensure correct function without interference.

0098441113309, V1.00, 02.2006

fully fabricated Motor and sensor system wiring

Use only the fully fabricated and tested connection lines that we supply for the motor connection and to connect the sensor system. They are optimally designed for these drive solutions.

Place the sleeve of the motor wiring on the motor plug connector and tighten the screw cap. Proceed in the same way with the sensor system connection line. Connect the motor wiring and the sensor system wiring with the power controller as specified by the circuit diagram of the power controller. If your motor is fitted with a holding brake, please follow the instructions on 4.4.4 “Holding brake connection“.

PE conductor connection

For safety reasons a redundant PE conductor connection is recommended.

4.3 Mechanical installation

⚠ CAUTION

Failure of the drive by mechanical damage.

If the maximum allowable forces on the shaft are exceeded, this will result in accelerated bearing wear or shaft breakage.

- Do not exceed the maximum allowable axial and radial forces.
- Protect the shaft against impact.
- Do not exceed the maximum allowable axial force even when pressing on output components.

Failure to follow these instructions can result in injury or equipment damage.

⚠ CAUTION

The gearbox can be destroyed by overload.

Exceeding the allowable torques will cause accelerated wear, shaft breakage or blocking.

- Do not exceed the peak gearbox torque in any operating status.
- Limit the motor torque if there is a danger of destruction of the gearbox by peak torques.
- Limit the torque in short-time operation (e.g. in an EMERGENCY STOP situation) to twice the continuous gearbox output torque M_{d2}

Failure to follow these instructions can result in injury or equipment damage.

0098441113309, V1.00, 02.2006

⚠ CAUTION

Hot surfaces can cause burns and damage to system components!

The drive temperature can exceed 100°C (212°F) in some conditions.

- Avoid contact with the hot drive.
- Do not place combustible or heat-sensitive components in immediate vicinity.
- Follow the actions described for heat dissipation.
- Check the temperature of the drive during the test run.

Failure to follow these instructions can result in injury or equipment damage.

Mounting position

The motor can be mounted in any position; according to EN 60034-7 the following mounting positions are defined and approved:

- IM B5 drive shaft horizontal
- IM V1 drive shaft vertical, shaft end down
- IM V3 drive shaft vertical, shaft end up

⚠ WARNING

Unexpected motion and destruction of the drive may cause injury.

If the environmental conditions are other than those approved, foreign material from the environment may enter the drive and cause unexpected reactions.

- Check the environmental conditions.
- If the seals run dry occasionally, make sure that there are no liquids on the end of the shaft. (For example in the IM V3 installation position).
- Protect the shaft seals and cable glands from the spray of a pressure cleaner.

Failure to follow these instructions can result in death, serious injury or equipment damage.

Mounting

When attaching the motor to the fastening flange, make sure that the motor is carefully aligned and has an even contact. There must not be any tension. The flange area of the machine must be sufficiently rigid and able to resist the dynamic reaction by the drive. The same applies for the coupling components or loads that are mounted on the shaft.

0098441113309, V1.00, 02.2006

Attaching output components

Attach output components such as pulleys, clutch etc. with suitable equipment and tools. The motors are fitted with a sliding bearing seat. The maximum effective axial and radial forces on the shaft must not exceed the values specified in "Technical Data, shaft load".

The shaft must be supported if necessary. If the output component is not installed correctly, e.g. pressing on a pinion wheel, the position capture sensor or the bearings may be damaged. Both motor and output component must be precisely aligned both axially and radially.

If this is not observed, it will run roughly, the bearings or the encoder will be damaged or the rotating components will be damaged. Follow the installation directions of the manufacturer of the output components.

0098441113309, V1.00, 02.2006

4.4 Electrical installation

The motors are not designed for direct connection to mains power; they must be operated with a suitable power amplifier only.

⚠ CAUTION

Overheating the plug may cause fire.

The power plug connector may overheat and fuse contacts by arcing if the plug is not correctly connected and the cap is not tightly screwed in place.

- Make sure that plug is correctly connected and the plug cap is tight.

Failure to follow these instructions can result in injury or equipment damage.

⚠ WARNING

Danger of injury and damage to system components by loss of degree of protection

Foreign bodies, deposits or humidity can cause unexpected device responses.

- Prevent any foreign bodies from entering the terminal device.
- Check that seals and cable entries are correctly seated.

Failure to follow these instructions can result in death, serious injury or equipment damage.

0098441113309, V1.00, 02.2006

4.4.1 Calculation of installation space

Principle diagram

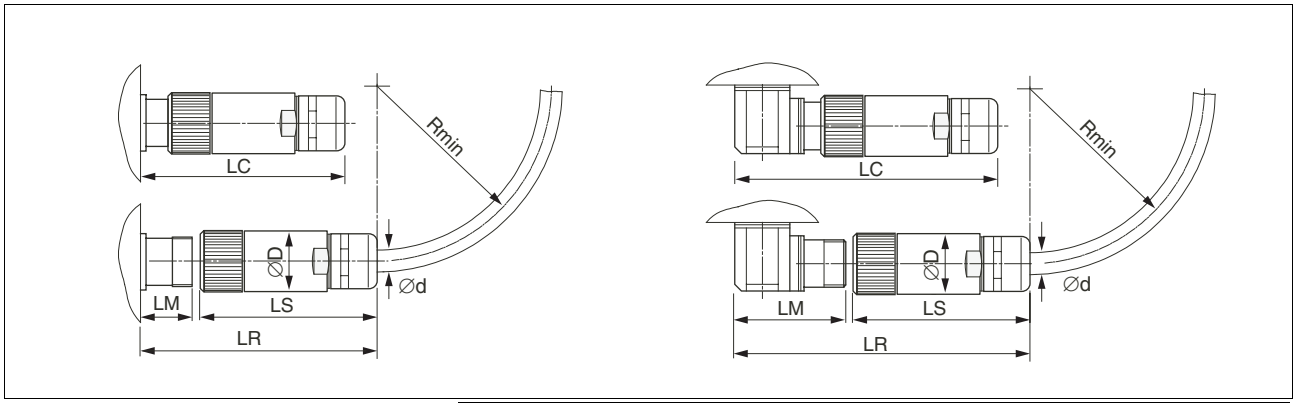

Dimensions		Motor plug	Sensor system plug
D	[mm]	28	26
LS	[mm]	79	54
LR	[mm]	115	80
LC	[mm]	95	65
LM	[mm]	34	24

Table 4.1 Connector data

Dimensions		Motor cable	Encoder cables
d	[mm]	10.5 (±0.2)	8.8 (±0.2)

Table 4.2 Cable data

General rule The following applies as a general rule for calculation of the plug insertion space R_{min}:

- stationary wiring: R = 7.5 * d
- trailing cables (moving): R = 7.5 * d

With the allowable temperatures a distinction is made between stationary and moving:

- stationary wiring: -40°C to +85°C
- trailing cables (moving): -20°C to +85°C

0098441113309, V1.00, 02.2006

4.4.2 Motor connection

- Protective conductor and shield must be connected to the motor and the device.
- To connect the cables in the terminal box only unscrew the four screws of the terminal box, do not remove the brake.
- The outer terminal is an EMC terminal
- Motors of the wire type must be connected to the front flange with PE.
- Two connections (e. g. U and V) can be reversed to change the direction of rotation of the motor shaft.

Cable data

Cable data		
Cross section	[mm^2]	4*1.5
Permissible voltage	[V]	800

Table 4.3 Cable data for motor connection

Wiring diagram for motor with braided wires

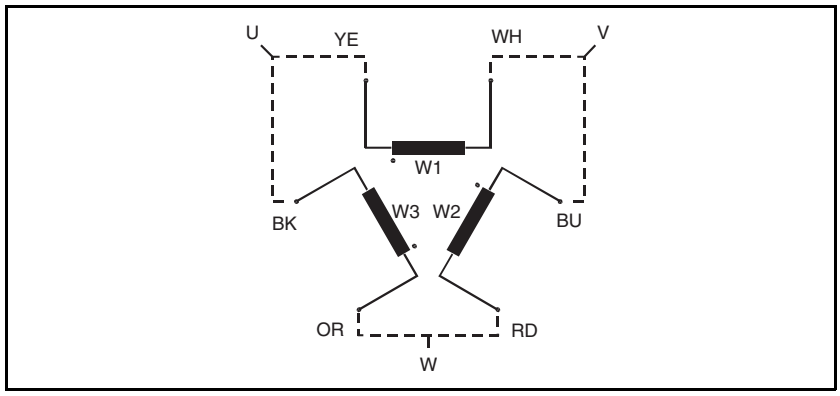

Terminal	Description	Motor wire colour (IEC 757)
U	Motor lead	black and yellow (BK and YE)
V	Motor lead	white and blue (WH and BU)
W	Motor lead	orange and red (OR and RD)

The braided wires of the same colours must be connected.

0098441113309, V1.00, 02.2006

Wiring diagram of motor with terminal box (symbolic)

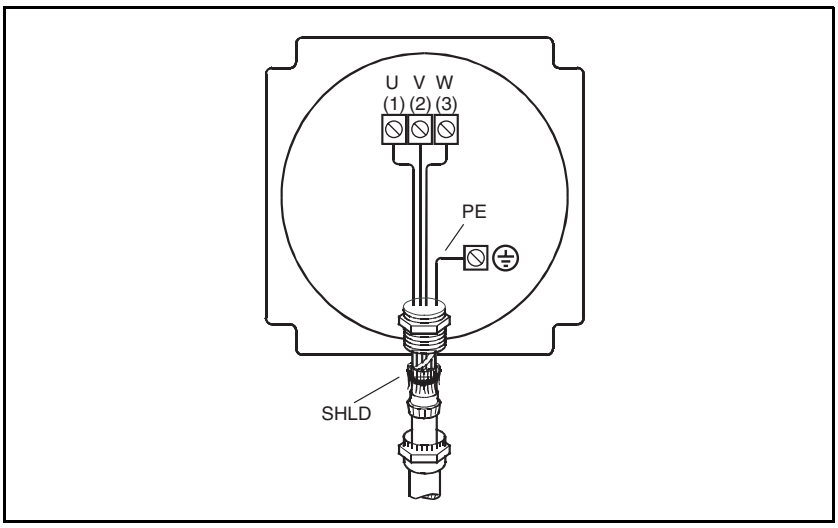

Pin	Terminal	Description	Strand colour (IEC 757)
1	U	Motor lead	brown (BR)
2	V	Motor lead	blue (BU)
3	W	Motor lead	black (BK)
	PE	Protective conductor	green/yellow (GN/YE)
	SHLD	Shield	

Starting torque of motor terminals	[Nm]	0.6
Starting torque for housing screws	[Nm]	0.6

Wiring diagram for motor with connector

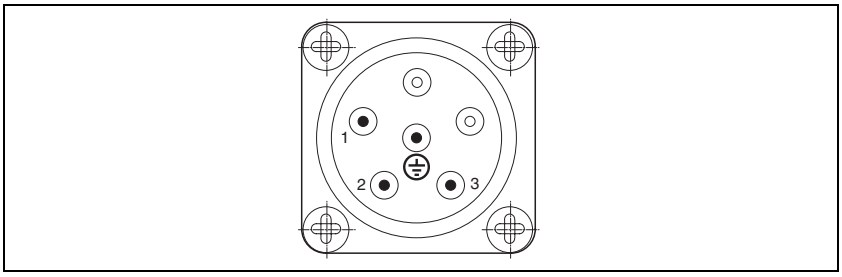

Figure 4.1 Connector, view of motor side to the contact pins

Pin	Terminal	Description
1	U	Motor lead
2	V	Motor lead
3	W	Motor lead
4	PE	Protective conductor

0098441113309, V1.00, 02.2006

4.4.3 Encoder connection

The shield must be connected to the motor and the device.

Cable data

Cable data	
Cross section	[mm^2] 5*2*0.25mm^2 and 1*2*0.5mm^2

Table 4.4 Cable data for encoder connection

Wiring diagram of encoder

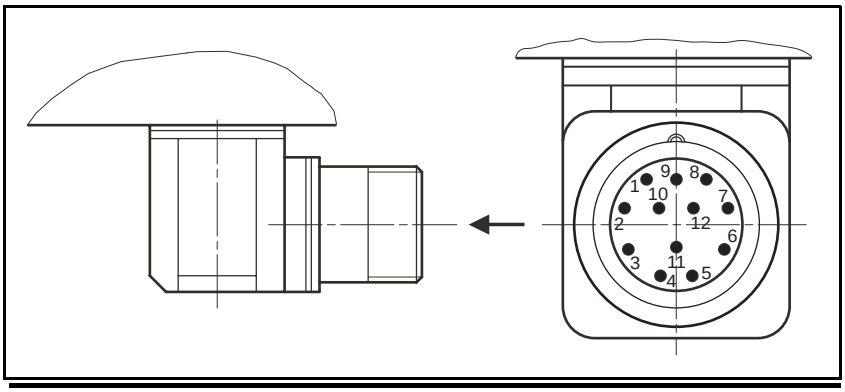

Pin	Designation	Description
1	ENC_A	Encoder signal channel A
2	$\overline{\text{ENC_A}}$	Encoder signal channel A, inverted
3	ENC_B	Encoder signal channel B
4	$\overline{\text{ENC_B}}$	Encoder signal channel B, inverted
5	ENC_I	Encoder signal channel I
6	$\overline{\text{ENC_I}}$	Encoder signal channel I, inverted
7	ENC_0V	Reference potential to ENC+5V
8	ENC+5V	$5V_{DC}$ power supply for encoder
9	ENC_0V_SENSE	Reference potential to ENC+5V_SENSE
10	ENC+5V_SENSE	SENSE line to ENC+5V
11	$\overline{\text{T_MOT}}$	Temperature sensor
12		not assigned

0098441113309, V1.00, 02.2006

4.4.4 Holding brake connection

⚠ WARNING

Wear or high temperature will cause loss of braking power.

Incorrect use of the holding brake causes accelerated wear and loss of braking power. Heat reduces the holding torque.

- Do not use the brake as a service brake.
- At operating temperatures over 80°C (176°F) do not exceed a maximum of 50% of the specified holding torque when using the brake.

Failure to follow these instructions can result in death, serious injury or equipment damage.

Control logic

For a motor with a holding brake an appropriate control logic is required. The control logic releases and closes the holding brake.

Holding brake controller

During heat build-up of the brake to 80°C the holding torque can be reduced 50% from the rated value. If the heat build-up is excessive a holding brake controller with voltage reduction is recommended. A voltage reduction to a maximum of 50% after ca. 100ms is therefore possible. When using a holding brake controller the brake must be connected with a shielded line.

Wiring diagram of holding brake

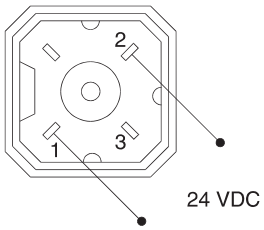

The connector is a component of the scope of supply.
Connector identification: Hirschmann Type G4 A 5M

0098441113309, V1.00, 02.2006

5 Commissioning

⚠ DANGER

Electric shock, fire or explosion

- Only technicians who are familiar with and understand the contents of this manual and the other relevant manuals are authorised to work on and with this drive system.
- Before working on the drive system:
  - Switch off power to all terminals.
  - Place a sign "DO NOT SWITCH ON" on the switch and lock to prevent its being switched on.
  - Allow the DC bus capacitors to discharge (see power amplifier manual).
  - Check that there is no power.
- Do not short-circuit DC bus or touch unshielded components or screws of the terminals under voltage.
- Install all covers and close the housing doors before applying power.
- The motor generates voltage when the shaft is rotated. Lock the shaft of the motor to prevent rotation before starting work on the drive system.
- AC voltages may jump over unused wires in the motor cable. Isolate unused wires at both ends of the motor cable.
- The system manufacturer is responsible for compliance with all applicable regulations relevant to earthing the drive system. Extend the earth through the motor cable with an additional earth at the motor housing.

Failure to follow these instructions will result in death or serious injury.

0098441113309, V1.00, 02.2006

5.1 Preparing for commissioning

Before commissioning check

- the correct mechanical installation: take particular note of correctly installed screws at the flange and tension-free alignment of the motor.
- the correctly conducted electrical installation: in particular check the PE conductor connections and earth connections. Make sure that all connections on the motor and to the power controller are correctly made and connected and that cable fasteners are tight.
- the correct isolation of unused reserve wires: unused lines must be correctly isolated at both ends, because induction currents may also flow in unused wires in drive systems.
- the guards to prevent contact: the appropriate guards must be installed to prevent contact with electrical and mechanical or moving parts.
- the environmental and operation conditions: make sure that the specified ambient conditions are maintained and that the drive solution matches the operating conditions as specified on the nameplate.
- the output components: check that the output components, which may be already installed, are balanced and precisely aligned.
- the parallel key at the shaft end of the motor: If you have a motor with a parallel key groove and parallel key, the parallel key must not be inserted when commissioning without output component or it must be appropriately secured.
- the function of the holding brake: check that the holding torque of the brake as specified in the data sheet is reached. Make sure that the holding brake is released after applying the brake voltage.

0098441113309, V1.00, 02.2006

5.2 Running commissioning

⚠ WARNING

Rotating parts may cause injury and damage to the system.

Rotating parts may cause injuries and may catch clothing or hair. Loose parts or parts that are unbalanced may be thrown clear.

- After installation check all rotating parts (parallel keys, clutch, ..).
- Use a guard as protection against rotating parts.

Failure to follow these instructions can result in death, serious injury or equipment damage.

⚠ WARNING

Unexpected motion may cause injury and damage to the system

When the drive is operated for the first time there is a high risk of unexpected motion because of possible wiring faults or unsuitable parameters.

- If possible, run the first test movement without coupled loads.
- Make sure that a functioning button for EMERGENCY STOP is within reach.
- Also anticipate a movement in the incorrect direction or oscillation of the drive.
- Make sure that the system is free and ready for the motion before starting the function.

Failure to follow these instructions can result in death, serious injury or equipment damage.

⚠ WARNING

Danger of injury from falling parts.

The motor may move as a result of the reaction torque, tip and fall.

- Fasten the motor securely to prevent it from breaking loose during strong acceleration.

Failure to follow these instructions can result in death, serious injury or equipment damage.

0098441113309, V1.00, 02.2006

⚠ WARNING

Danger of injury and damage to system components by unbraked motor.

In case of power failure and faults that cause the power amplifier to switch off, the motor will no longer be actively braked and will run on to a mechanical stop, possibly at high speed.
Overload or faults can cause danger by failure of the holding brake. Incorrect use of the holding brake results in accelerated wear and failure.

- Do not use the internal brake as a service brake.
- If necessary, use a damped mechanical stop or a service brake.
- Check the function of the brake.
- In addition, secure the danger area to prevent entry.
- The brake function must be checked again after frequent EMERGENCY STOP braking operations.

Failure to follow these instructions can result in death, serious injury or equipment damage.

⚠ CAUTION

Hot surfaces can cause burns and damage to system components!

The drive temperature can exceed 100°C (212°F) in some conditions.

- Avoid contact with the hot drive.
- Do not place combustible or heat-sensitive components in immediate vicinity.
- Follow the actions described for heat dissipation.
- Check the temperature of the drive during the test run.

Failure to follow these instructions can result in injury or equipment damage.

0098441113309, V1.00, 02.2006

6 Diagnostics and troubleshooting

6.1 Mechanical faults

Error	Cause	Troubleshooting
excessive heat	overload	reduce load
	brake not open	check brake controller
	excessive dirt	clean motor
whistling or knocking noise	bearing or gearbox faulty	contact service
grinding noise	rotating output component is grinding	align output component
radial oscillation	orientation of output component faulty	align output component
	unbalance of an output component	balance output component
	shaft bent	contact service
	resonance with coupling components	change coupling type
	resonance with fastening	check stiffness of motor fixing
axial oscillation	output component incorrectly aligned	align output component
	output component impacts	check output component
	resonance in fastening	check stiffness of motor fastening
encoder does not operate or only operates sporadically	Encoder with axially displaced motor shaft may be damaged (max. axial load exceeded)	Make sure that the axial load is not exceeded or the shaft is returned to the original axial position

6.2 Electrical faults

Error	Cause	Troubleshooting
motor does not run or runs heavily	Overload	Reduce load
	error in power controller	check power controller
	connection line fault or not connected, phase/interturn fault	check connection lines
excessive heat	overcurrent	check motor phase current, use current reduction
heat build-up at connection terminals	plug loosened or not tightened	tighten plug

0098441113309, V1.00, 02.2006

0098441113309, V1.00, 02.2006

7 Accessories and spare parts

7.1 Accessories

Description	Order number
Holding brake control HBC	VW3M3103

7.2 Motor cable

Description	Order number
Motor cable sized for steppermotor 4x1,5 shielded;The cable has an 6-pin round plug on the motor side; other cable end = open; length=3m	VW3S5101R30
Motor cable sized for steppermotor 4x1,5 shielded;The cable has an 6-pin round plug on the motor side; other cable end = open; length=5m	VW3S5101R50
Motor cable sized for steppermotor 4x1,5 shielded;The cable has an 6-pin round plug on the motor side; other cable end = open; length=10m	VW3S5101R100
Motor cable sized for steppermotor 4x1,5 shielded;The cable has an 6-pin round plug on the motor side; other cable end = open; length=15m	VW3S5101R150
Motor cable sized for steppermotor 4x1,5 shielded;The cable has an 6-pin round plug on the motor side; other cable end = open; length=20m	VW3S5101R200
Motor cable sized for steppermotor 4x1,5 shielded;both cable end = open; length=3m	VW3S5102R30
Motor cable sized for steppermotor 4x1,5 shielded;both cable end = open; length=5m	VW3S5102R50
Motor cable sized for steppermotor 4x1,5 shielded;both cable end = open; length=10m	VW3S5102R100
Motor cable sized for steppermotor 4x1,5 shielded;both cable end = open; length=15m	VW3S5102R150
Motor cable sized for steppermotor 4x1,5 shielded;both cable end = open; length=20m	VW3S5102R200

0098441113309, V1.00, 02.2006

0098441113309, V1.00, 02.2006

8 Service, maintenance and disposal

⚠ DANGER

Electric shock, fire or explosion

- Only technicians who are familiar with and understand the contents of this manual and the other relevant manuals are authorised to work on and with this drive system.
- Before working on the drive system:
  - Switch off power to all terminals.
  - Place a sign "DO NOT SWITCH ON" on the switch and lock to prevent its being switched on.
  - Allow the DC bus capacitors to discharge (see power amplifier manual).
  - Check that there is no power.
- Do not short-circuit DC bus or touch unshielded components or screws of the terminals under voltage.
- Install all covers and close the housing doors before applying power.
- The motor generates voltage when the shaft is rotated. Lock the shaft of the motor to prevent rotation before starting work on the drive system.
- AC voltages may jump over unused wires in the motor cable. Isolate unused wires at both ends of the motor cable.
- The system manufacturer is responsible for compliance with all applicable regulations relevant to earthing the drive system. Extend the earth through the motor cable with an additional earth at the motor housing.

Failure to follow these instructions will result in death or serious injury.

You cannot carry out repairs yourself. The repair should only be carried out by a certified customer service organisation. No warranty or liability is accepted for repairs made by the customer.

8.1 Service address

If you cannot resolve the fault yourself please contact your appointed sales partner. Have the following details available:

- Type, identification number and serial number of the product (type plate)
- Type of fault (possibly with fault number)
- Previous and concurrent conditions
- Your own ideas regarding the cause of the fault

Include this information if you return the product for inspection or repair.

0098441113309, V1.00, 02.2006

If you have any questions please contact your local dealer. Your dealer will be happy to give you the name of a customer service outlet in your area.

http://www.berger-lahr.com

8.2 Maintenance

Before all work on the drive system consult the chapters on Installation and Commissioning to see what precautions and processes must be observed.

The motor itself is maintenance-free. However, we recommend carrying out the following maintenance procedures at regular intervals:

Connections and fastening

- ▶ Check all connection lines and plug connectors regularly for damage. Replace damaged lines immediately.
- ▶ Check that all drive components are firmly seated
- ▶ Tighten all mechanical and electrical threaded connections. Check the screw caps on the connection lines.

Cleaning and care

Clean dust and dirt off the motor, otherwise the heat dissipation of the motor will be less effective. Insufficient heat dissipation to the ambient air may increase the temperature in the bearings excessively and adversely affect the bearing lubricant. In addition, the temperature monitor may stop the drive unit even though all other conditions are within limits.

Motors with shaft sealing rings (degree of protection IP56) are not suitable for cleaning with a high-pressure cleaner. The high pressure may force water into the motor.

When using solvents or cleaning agents, make sure that the motor and encoder line, cable bush seals, O-rings and motor paint are not damaged.

Occasional lubrication of the sealing rings extends their life time.

Bearing replacement

The bearings are not designed to be replaced by the customer, because this procedure partially demagnetises the motor and it loses power.

0098441113309, V1.00, 02.2006

9 Glossary

9.1 Units and conversion tables

The value in the specified unit (left column) is calculated for the desired unit (top row) with the formula (in the field).

Example: conversion of 5 metres [m] to yards [yd]
5 m / 0.9144 = 5.468 yd

9.1.1 Length

	in	ft	yd	m	cm	mm
in	-	/ 12	/ 36	* 0.0254	* 2.54	* 25.4
ft	* 12	-	/ 3	* 0.30479	* 30.479	* 304.79
yd	* 36	* 3	-	* 0.9144	* 91.44	* 914.4
m	/ 0.0254	/ 0.30479	/ 0.9144	-	* 100	* 1000
cm	/ 2.54	/ 30.479	/ 91.44	/ 100	-	* 10
mm	/ 25.4	/ 304.79	/ 914.4	/ 1000	/ 10	-

9.1.2 Mass

	lb	oz	slug	kg	g
lb	-	* 16	* 0.03108095	* 0.4535924	* 453.5924
oz	/ 16	-	* $1.942559*10^{-3}$	* 0.02834952	* 28.34952
slug	/ 0.03108095	/ $1.942559*10^{-3}$	-	* 14.5939	* 14593.9
kg	/ 0.453592370	/ 0.02834952	/ 14.5939	-	* 1000
g	/ 453.592370	/ 28.34952	/ 14593.9	/ 1000	-

9.1.3 Force

	lb	oz	p	dyne	N
lb	-	* 16	* 453.55358	* 444822.2	* 4.448222
oz	/ 16	-	* 28.349524	* 27801	* 0.27801
p	/ 453.55358	/ 28.349524	-	* 980.7	* $9.807*10^{-3}$
dyne	/ 444822.2	/ 27801	/ 980.7	-	/ $100*10^{3}$
N	/ 4.448222	/ 0.27801	/ $9.807*10^{-3}$	* $100*10^{3}$	-

9.1.4 Power

	HP	W
HP	-	* 745.72218
W	/ 745.72218	-

0098441113309, V1.00, 02.2006

9.1.5 Rotation

	1/min (RPM)	rad/s	deg./s
1/min (RPM)	-	* π / 30	* 6
rad/s	* 30 / π	-	* 57.295
deg./s	/ 6	/ 57.295	-

9.1.6 Torque

	lb·in	lb·ft	oz·in	Nm	kp·m	kp·cm	dyne·cm
lb·in	-	/ 12	* 16	* 0.112985	* 0.011521	* 1.1521	* $1.129*10^6$
lb·ft	* 12	-	* 192	* 1.355822	* 0.138255	* 13.8255	* $13.558*10^6$
oz·in	/ 16	/ 192	-	* $7.0616*10^{-3}$	* $720.07*10^{-6}$	* $72.007*10^{-3}$	* 70615.5
Nm	/ 0.112985	/ 1.355822	/ $7.0616*10^{-3}$	-	* 0.101972	* 10.1972	* $10*10^6$
kp·m	/ 0.011521	/ 0.138255	/ $720.07*10^{-6}$	/ 0.101972	-	* 100	* $98.066*10^6$
kp·cm	/ 1.1521	/ 13.8255	/ $72.007*10^{-3}$	/ 10.1972	/ 100	-	* $0.9806*10^6$
dyne·cm	/ $1.129*10^6$	/ $13.558*10^6$	/ 70615.5	/ $10*10^6$	/ $98.066*10^6$	/ $0.9806*10^6$	-

9.1.7 Moment of inertia

	lb·in²	lb·ft²	kg·m²	kg·cm²	kp·cm·s²	oz·in²
lb·in²	-	/ 144	/ 3417.16	/ 0.341716	/ 335.109	* 16
lb·ft²	* 144	-	* 0.04214	* 421.4	* 0.429711	* 2304
kg·m²	* 3417.16	/ 0.04214	-	* $10*10^3$	* 10.1972	* 54674
kg·cm²	* 0.341716	/ 421.4	/ $10*10^3$	-	/ 980.665	* 5.46
kp·cm·s²	* 335.109	/ 0.429711	/ 10.1972	* 980.665	-	* 5361.74
oz·in²	/ 16	/ 2304	/ 54674	/ 5.46	/ 5361.74	-

9.1.8 Temperature

	°F	°C	K
°F	-	(°F - 32) * 5/9	(°F - 32) * 5/9 + 273.15
°C	°C * 9/5 + 32	-	°C + 273
K	(K - 273.15) * 9/5 + 32	K - 273.15	-

9.1.9 Conductor cross section

AWG	1	2	3	4	5	6	7	8	9	10	11	12	13
mm²	42.4	33.6	26.7	21.2	16.8	13.3	10.5	8.4	6.6	5.3	4.2	3.3	2.6

AWG	14	15	16	17	18	19	20	21	22	23	24	25	26
mm²	2.1	1.7	1.3	1.0	0.82	0.65	0.52	0.41	0.33	0.26	0.20	0.16	0.13

0098441113309, V1.00, 02.2006

9.2 Terms and Abbreviations

Axial forces	Tension or compression forces acting longitudinally on the shaft
Centring collar	centric protrusion on the motor flange to ensure precise assembly.
EMC	Electromagnetic compatibility
Encoder	Sensor for recording the angular position of a rotating element. The encoder is mounted on the motor and signals the angular position of the rotor.
Holding brake	brake that only prevents the motor from rotating without power after it has stopped (e.g. a vertikal-axis lowering). It must not be used as a service brake for braking motion.
Length	length of motor without optional equipment (such as brake or gearbox)
NIEC®	patented process that increases the volume in the gearbox during heat build-and thus reduces the pressure on the shaft sealing ring. For high-speed applications at high torques or high temperature cycles.
PCS®	patented process for maximum precision when connecting the motor shaft to the pinion.
Protection class	The protection class is a standardised specification for electrical equipment that describes the protection against the ingress of foreign bodies and water (for example, IP20).
PTC	resistance with positive temperature coefficient. Resistance value is increased as the temperature rises.
Radial forces	forces that act radially on the shaft
Shaft sealing ring	a special sealing ring between the fixed flange and the rotating shaft; it increases the protection class of the motor flange. Regular lubrication of the shaft sealing ring is essential and the allowable maximum speed of the motor shaft must not be exceeded.
Size	defined by the flange size in the type code

0098441113309, V1.00, 02.2006

0098441113309, V1.00, 02.2006

10 Index

A

Abbreviations 9-3
Accessories 7-1
Accessories and spare parts 7-1
Attaching output components 4-6

B

Before installation... 4-2

C

Cable data
- encoder connection 4-11
- motor connection 4-9

care of the motor 8-2
CE mark 1-5
Characteristic curves
- VRDM 31117 3-30
- VRDM 31122 3-31
- VRDM 364 3-12
- VRDM 366 3-13
- VRDM 368 3-14
- VRDM 3910 3-22
- VRDM 3913 3-23
- VRDM 397 3-21

Cleaning the motor 8-2
Commissioning 5-1
- preparation 5-2
- running 5-3

Connector installation space 4-8

D

Diagnostics 6-1
Dimensional drawing
- PLE gearbox 3-40
- PLS gearbox 3-41
- VRDM 311x 3-28
- VRDM 36x 3-10
- VRDM 39x 3-19

Disposal 8-1

E

EMC 4-3
- motor and sensor cables 4-3

EMC requirement
- Earth band 4-3
- Mains and motor connection 4-3
- Run motor cable alone 4-3

Encoder
- pulse diagram 3-34
- technical data 3-32, 3-34
- temperature monitoring 3-34

0098441113309, V1.00, 02.2006

wiring diagram 4-11
Encoder connection
cable data 4-11
Environmental influences 3-2

G

Gearbox
technical data 3-35
Glossary 9-1

H

Holding brake
technical data 3-32
wiring diagram 4-12

I

Installation
mechanical 4-4
Intended use 2-1
Introduction 1-1
IP degree of protection 3-3

L

Life time 3-2

M

Maintenance 8-1
maximum press-on force 3-1
Mechanical installation 4-4
Motor connection
cable data 4-9
Motor models 3-5
Motor with braided wires
wiring diagram 4-9
Motor with connector
wiring diagram 4-10
Motor with terminal box
wiring diagram 4-10
Motor-specific data
VRDM 311x 3-24
VRDM 36x 3-6
VRDM 39x 3-15
Mounting 4-5
Mounting position of motor 4-5

N

Name plate 1-4

P

PLE gearbox 3-35
dimensional drawing 3-40
technical data 3-36
PLS gearbox 3-35

0098441113309, V1.00, 02.2006

dimensional drawing 3-41
technical data 3-37
press-on force 3-1
Pulse diagram (encoder) 3-34

S

Service 8-1
Service address 8-1
Shaft load
VRDM 311x 3-25
VRDM 36x 3-7
VRDM 39x 3-16

T

Technical data 3-1
PLE gearbox 3-36
PLS gearbox 3-37
technical data
encoder 3-32, 3-34
gearbox 3-35
holding brake 3-32
Temperature monitoring (encoder) 3-34
Terms 9-3
Troubleshooting 6-1
Type code
VRDM 311x 3-25
VRDM 36x 3-8
VRDM 39x 3-16
VRDM 3x overview 1-3

U

Units and conversion tables 9-1

W

Wiring diagram
encoder 4-11
holding brake 4-12
motor with braided wires 4-9
motor with connector 4-10
motor with terminal box 4-10

0098441113309, V1.00, 02.2006

0098441113309, V1.00, 02.2006