DISTRIBUTION SOLUTIONS

NAL/NALF

MV indoor switch-disconnector and switch-fuse combination

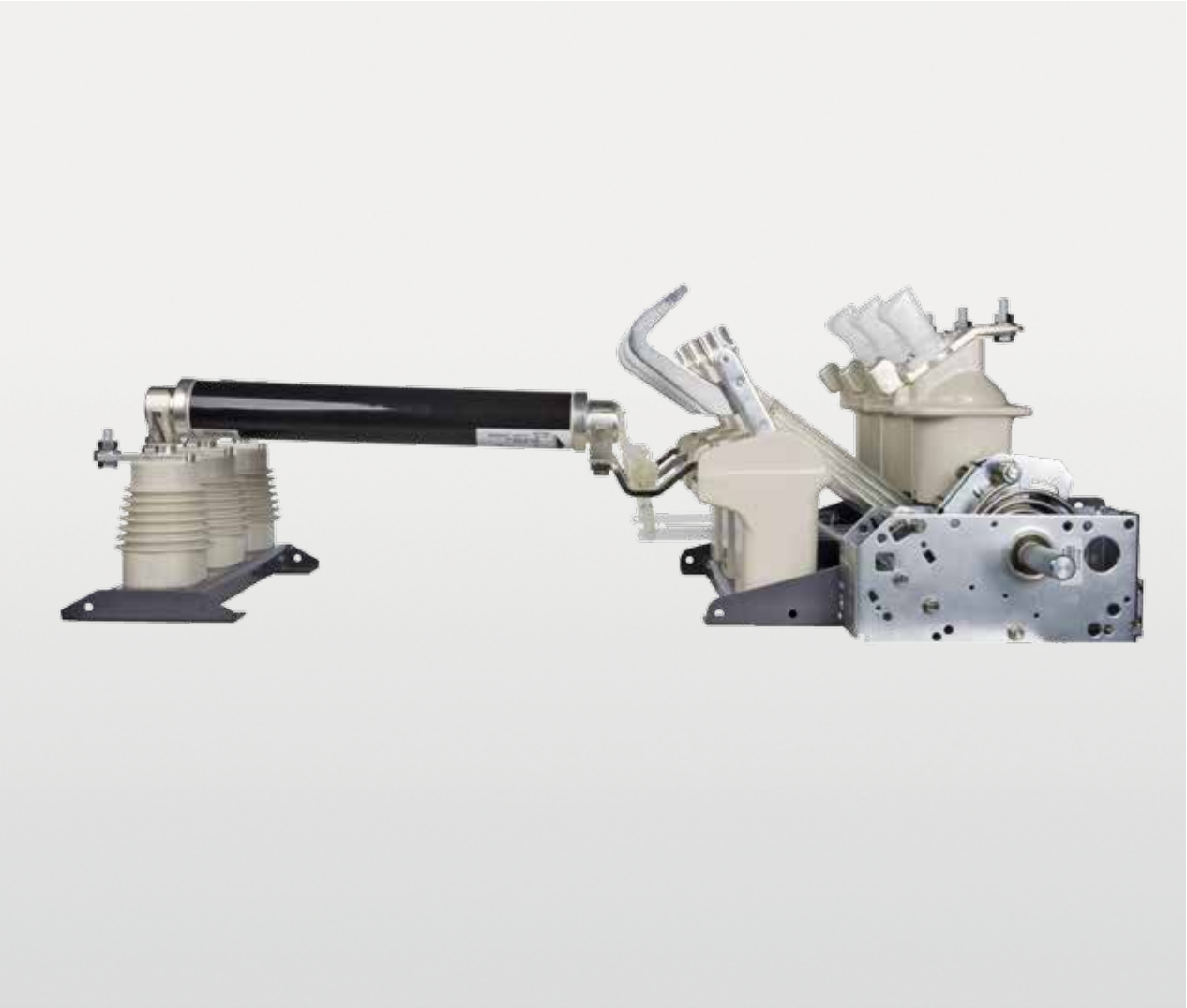

—

NAL/NALF medium voltage indoor switch-disconnector that is well known around the globe, and more than 600,000 switches have been produced so far. With a unique design that extinguishes electric arcs and enables high switching capacity, they represent an attractive solution as a key breaking element for applications in enclosed switchgear and transformer compact substations. In combination with ABB type CEF current limiting fuses, NALF switch-fuse combination ensures control over the full range of overload and short-circuit current. NAL/NALF switch-disconnector can be used in all medium voltage primary and secondary distribution systems like industrial workshops, factories, prefabricated substations, CSS, solar and wind grid connection stations.

Table of contents

004 – 005 **NAL/NALF: its strengths, your benefits**

006 – 009 **1. Description**

010 – 037 **2. Selection and ordering**

038 – 039 **3. Motor operating device**

040 – 050 **4. Dimensional drawings**

NAL/NALF: its strengths, your benefits

Productivity **Reliability** **Efficiency**

Productivity
Maximizing your output

Continuous operation
Reduced spares and maintenance
- 1,000 mechanical close-open operations assured (M1 class)
- Long electrical life (up to E3 class)
- 15 years maintenance intervals

Services and training
Technical cooperation/license based on a modular concept allowing the OEM to choose in a flexible way the level of added value which more suits its individual needs

Easy to installing
Satisfy different customer needs in a simple fast way
- Modular design minimizes installation time – Full range of plug and play accessories – Same accessories available for all the switch-disconnector series
- Have flexibility and the easiest connection and interface with the panel

Reliability
Protecting your assets

Safety and protection
Proven reliability –
- High number of operations and long electrical and mechanical life (up to E3 and M1 class)
- Visible open insulation gap

Global availability
ABB by your side – Count on a worldwide presence for any support you may need

Reliable in extreme conditions
Good performance in harsh environment – Wide operating temperatures within -40/+55 Celsius degrees (higher values available based on agreement with manufacturer)
- Insulators have longer creepage distance and they are made of materials more resistant against water condensation conditions (refers to H versions).

Efficiency
Optimizing your investments

Affordable Range
Capacitor switch version
- Have a competitive solution in C2 class (for 12 kV).

1. Description

General

NAL-type switch-disconnectors are based on a modular principle, which gives it a wide range of functionality. With a unique design that extinguishes electric arcs and enables high switching capacity, they represent an attractive solution as a key breaking element for applications in enclosed switchgear and transformer compact substations. In combination with ABB type CEF current limiting fuses, NALF switch-fuse combination ensure control over the full range of overload and short-circuit currents.

The main areas of application of NAL/NALF switch-disconnectors are as:

- Line switch-disconnectors in medium voltage networks,
- Switch-disconnectors with fuses for the switching and protection of:
  - Distribution transformers
  - Motors

The following versions are available:

- NAL – IEC standard line switch-disconnector
- NALF – IEC standard switch-fuse combination
- NAL-H – IEC standard line switch-disconnector in harsh operating conditions.
- NALF-H – IEC standard switch-fuse combination in harsh operating conditions.

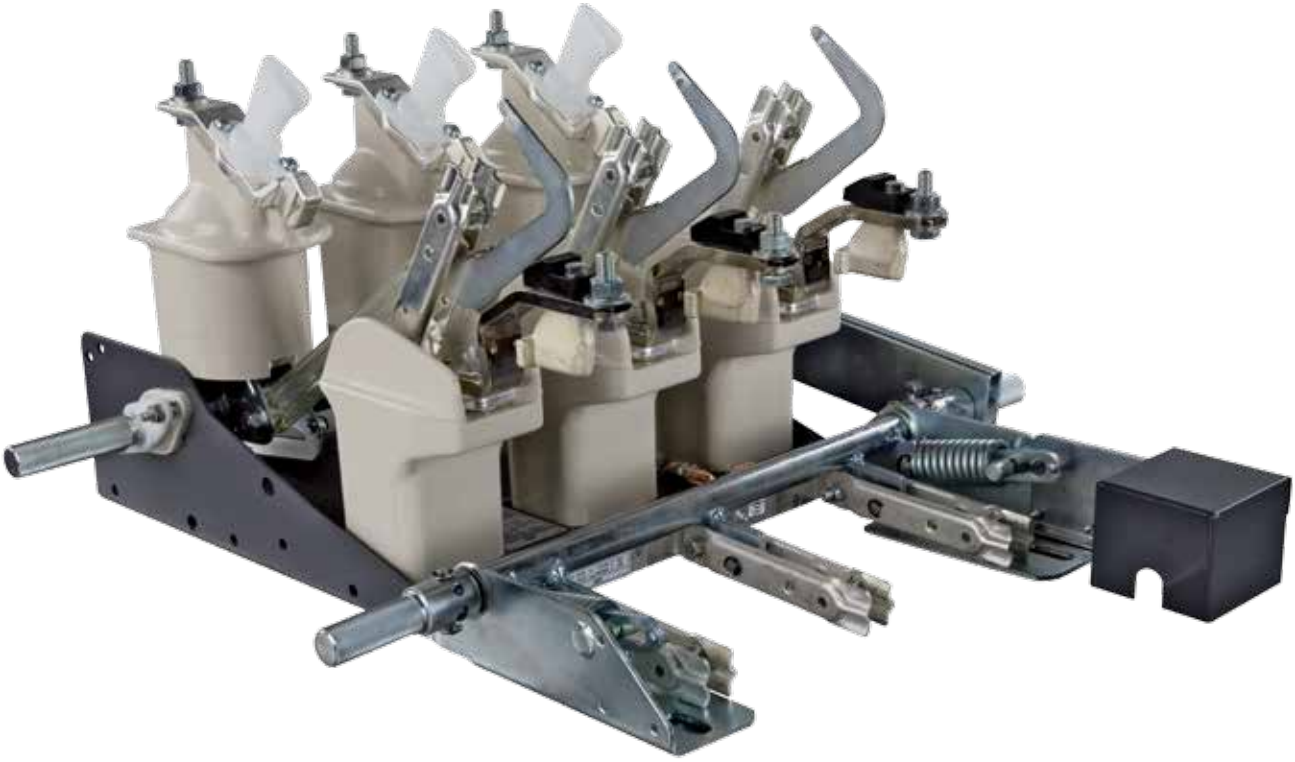

—
01 Indoor switch-disconnector type NAL with earthing switch type E

Main product features

A NAL switch-disconnector (which interrupts load currents up to 1250 A) and a small fault-current circuit combined with a fuse base (F) and current limiting fuses (which break large short-circuit currents) create a NALF-type switch-disconnector that provides protection against a majority of fault types in a modern electric network. Both NAL/NALF are designed in accordance with the requirements of the following standards:
IEC 60129, IEC 60265, IEC 60694, IEC 62271-102, IEC 62271-103 and IEC 62271-105 (IEC 420 for NALF 36kV), all of which consider switches for general use and ensure there is safe switching coordination between a switch-disconnector and a current limiting fuse.
NAL fulfil requirements of IEC/TS 62271-304:2008 degree 0: C_oP_L, (C_o: Condensation does not normally occur not more than twice a year, P_L: Light pollution) which correspond to normal indoor service condition as described in IEC 62271-1 p. 2.1.1. Whereas NAL- H version meets requirement of Design Class 2 for severe operating conditions according to IEC/TS 62271-304:2008.
The switch-disconnector system NAL/NALF is based on a modular principle. The basic unit consists of a frame with insulators and current carrying parts. Two different types of operating mechanisms, snap action mechanism type K or stored spring energy mechanism type A, can be mounted on the frame. Fuse bases type F, with or without fuse tripping mechanism, and an earthing switch type E/EB, suitable for both direct mounting and free standing components, complete the basic equipment of a switch-disconnector. These modules can be easily configured according to customer expectations. Accessories, such as shunt trip, under-voltage release, auxiliary switches, motor operation and various systems for manual operation can easily be added.

—
02 Example of switch arrangement

1 – **Auxiliary contact**
Shows position of switch-disconnector (open/close)

2 – **Mechanizm**
For operating switch-disconnector

3 – **Shunt trip**
Release charged spring mechanism, opens the switch-disconnector

4 – **Mechanical interlock**
Interlocks switch-disconnector when cooperating with earthing switch

5 – **Quick earthing switch**
Earth main circuit of switch-disconnector

6 – **Earthing switch shaft**
For operating earthing switch or for mechanical interlocking

7 – **Motor drive**
For automatic charge and operating switch-disconnector

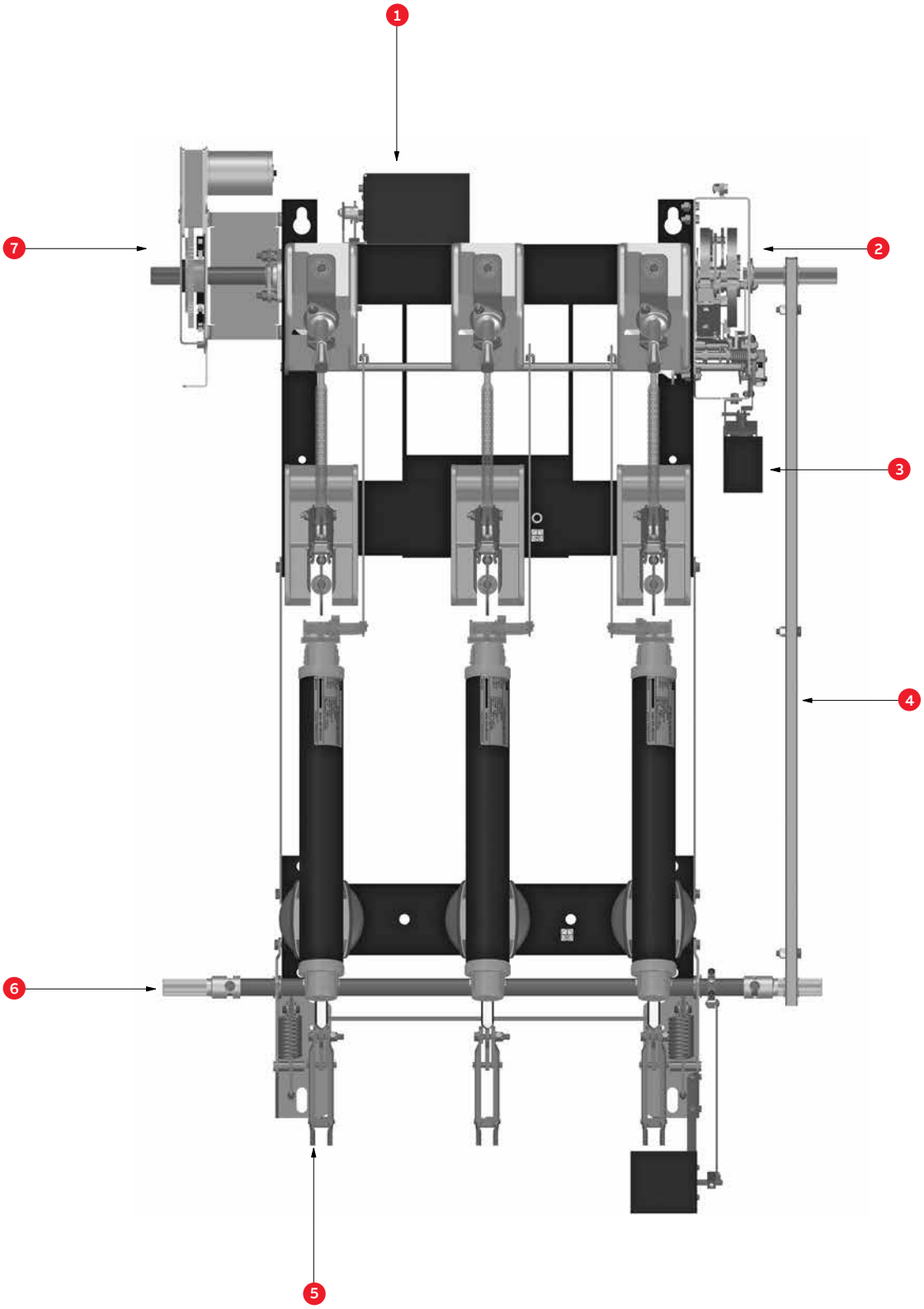

—
03 Efficiency of load current interruption in relation to breaking technique
Curve 1: Gas blast
Curve 2: Air blast
Curve 3: The final extinguishing effect = Curve 1+ Curve 2

—
04 Interruption
1 – Air blast
2 – Gas blast
3 – Operating rod

—
05 Switch-disconnector in open position

—
06 Closing phase

—
07 Switch-disconnector in closed position
1 – Opening side
2 – Pivot side

Functional description

To ensure correct operation for all relevant currents, the switch-disconnector system NAL/NALF is equipped with a dual arc extinguishing system. As the current is being interrupted, the arc will be exposed to:

- A current independent air blast which automatically starts at the correct time during the interrupting process. This is achieved by designing the insulators on the opening side as cylinders with pistons. The pistons are connected to the mechanism in the same way as the moving contacts. The air blast therefore starts simultaneously with the contact movement (autopneumatic air blast).
- A current dependent gas blast which occurs when the walls of the arcing nozzles are exposed to the hot arc.

During this process, large volumes of gas are released and the arc is effectively cooled.
The concentration of the developed gas increases with increasing current. The so called Hart gas effect is therefore most important at high currents. A well balanced utilization of these two effects has resulted in an arc extinguishing system with high reliability for all relevant currents. Because of the autopneumatic air blast it will only be necessary to utilize the Hart gas effect for high currents. This gives an arcing system which can withstand a large number of operations without excessive wear. Consequently the NAL switches comply with the highest electrical performance classes E3 of IEC 62271-103 (IEC 60265-1) (for selected nominal voltages only). In addition, voltage ratings are tested with a hundred operations under a load rated current of 630 A, which is a very important feature of the product, distinguishing it from other apparatus of this type on the market.

—
03

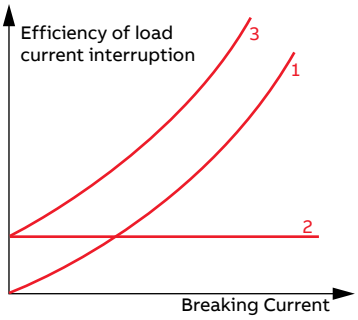

—
04

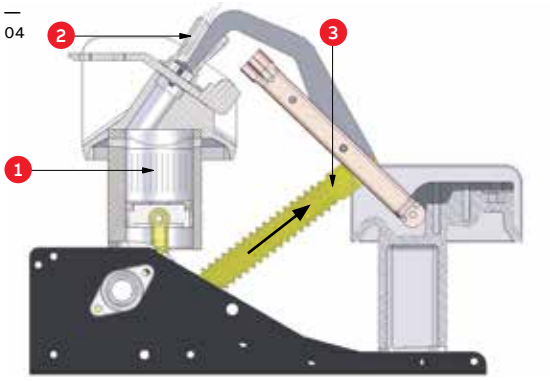

—
05

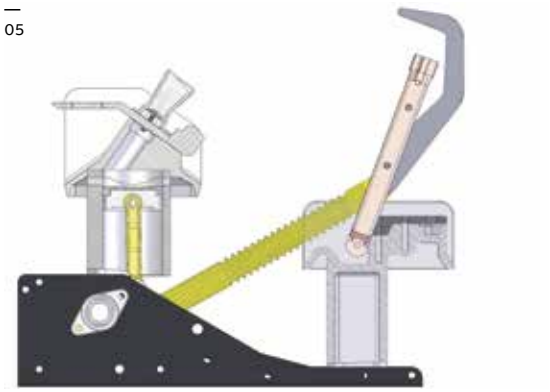

—
06

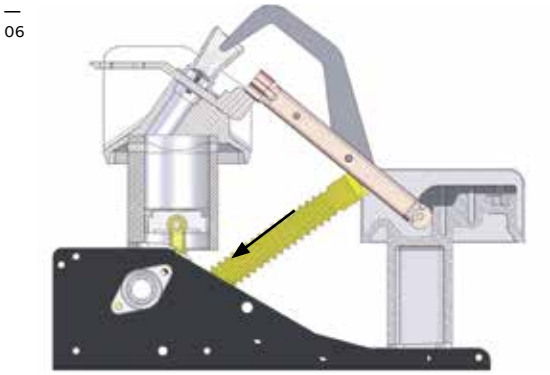

—
07

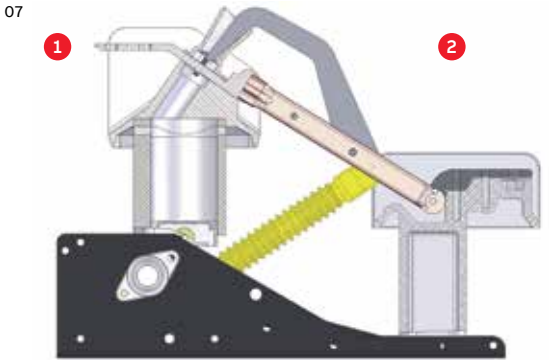

2. Selection and ordering

Types designation

NAL									Switch-disconnector
	F								with integrated fuse base[1]
	FO								with opening side fuse base
		12							Rated voltage 12 kV
		17							Rated voltage 17.5 kV
		24							Rated voltage 24 kV
		36							Rated voltage 36 kV
			4[3]						Rated current 400 A
			6						Rated current 630 A
			8[2]						Rated current 800 A
			10[2]						Rated current 1000 A
			12[3]						Rated current 1250 A
				K					Snap action mechanism
				A					Stored spring energy mechanism
					150				Pole distance for voltage 4.16...12 kV
					170				Pole distance for voltage 4.16...17.5 kV
					210				Pole distance for voltage 4.16...17.5 kV
					235				Pole distance for voltage 24...27.6 kV
					275				Pole distance for voltage 24...27.6 kV
					360				Pole distance for voltage 34.5...36 kV
						H			Version for severe operating conditions
							R		Right hand side operation
							L		Left hand side operation[4]
								E	Quick-make earthing switch[5]
								EF	Earthing switch mounted on fuse-base
								EI	Earthing switch mounted on fuse-base from switch-disconnector side
								EB	Free standing earthing switch

[1] additional information needed when placing the order:
- the length of fuse link
- mounting side - pivot or opening
- with or without fuse tripping

[2] for 36 kV only
[3] up to 17.5 kV only
[4] for left hand side operation shaft extension must be used
[5] the earthing switch is normally delivered without mechanical interlocking, which must be specified separately. For 36 kV, earthing switch is provided as self-standing only type EB.

General remarks for orders

- Normally, the switch-disconnector is delivered with a fuse base for pivot side mounting. A fuse base for opening side mounting must be specified in the order.
- Closing or opening of the switch-disconnector must be carried out by an operating coil. The coil must be ordered separately.
- For left-hand operation, a shaft extension must be used. The extension must be ordered separately.
- The earthing switch is normally delivered without mechanical interlocking. There is an additional charge for interlocking.
- The switch-disconnector type NALF/NAL can be ordered at the same time, together with ABB current limiting fuse types CEF and CEF-S. The whole range of ordering numbers for ABB fuse-links are available in the "Fuses" catalogue. The reference fuse-links ordering numbers are listed in the tables below.

—

Reference list for ABB CEF/CEF-VT fuse-link selection for transformer protection with load 100% and 120%

	Transformer				Fuse-link					
Rated system voltage [kV]	Rated power S_R [kVA]	Relative impedance voltage u_k [%]	Rated current I_R [A] 100%	Rated current I_R [A] 120 %	Type	Rated voltage U_R [kV]	Rated current I_R [A]	Length e [mm]	Catalogue number	Switch-fuse combination dedicated type
6 - 7.2	50	4	4.80	5.76	CEF	3/7.2	10	192 292	1YMB710716M1512 1YMB710716M2512	NALF 12 kV
	75	4	7.20	8.64	CEF		16	192 292	1YMB710718M1512 1YMB710718M2512	
	100	4	9.60	11.52	CEF		20	192 292	1YMB710719M1512 1YMB710719M2512	
	125	4	12.00	14.40	CEF		20	192 292	1YMB710719M1512 1YMB710719M2512	
	160	4	15.40	18.48	CEF		25	192 292	1YMB710721M1512 1YMB710721M2512	
	200	4	19.20	23.04	CEF		31.5	192 292	1YMB710724M1512 1YMB710724M2512	
	250	4	24.10	28.92	CEF		40	192 292	1YMB710725M1512 1YMB710725M2512	
	315	4	30.30	36.36	CEF		50	192 292	1YMB710727M1512 1YMB710727M2512	
	400	4	38.50	46.20	CEF		50	192 292	1YMB710727M1512 1YMB710727M2512	
	500	4	48.10	57.72	CEF		63	192 292	1YMB710729M1612 1YMB710729M2612	
	630	4	60.60	72.72	CEF		100	192 292	1YMB710733M1612 1YMB710733M2612	
	800	5	77.00	92.40	CEF		100	192 292	1YMB710733M1612 1YMB710733M2612	
	1000	5	96.20	115.44	CEF		125	192[2)] 292	1YMB710735M1812[2)] 1YMB710735M2812	

Rated system voltage [kV]	Transformer				Fuse-link					Switch-fuse combination dedicated type
	Rated power S_R [kVA]	Relative impedance voltage u_k [%]	Rated current I_R [A] 100%	Rated current I_R [A] 120 %	Type	Rated voltage U_R [kV]	Rated current I_R [A]	Length e [mm]	Catalogue number	
10 – 12	50	4	2.90	3.48	CEF	6/12	10	292 442	1YMB711216M2512 1YMB711216M4512	NALF 12 kV
	75	4	4.30	5.16	CEF		10	292 442	1YMB711216M2512 1YMB711216M4512	
	100	4	5.80	6.96	CEF		16	292 442	1YMB711218M2512 1YMB711218M4512	
	125	4	7.20	8.64	CEF		16	292 442	1YMB711218M2512 1YMB711218M4512	
	160	4	9.20	11.04	CEF		20	292 442	1YMB711219M2512 1YMB711219M4512	
	200	4	11.50	13.80	CEF		20	292 442	1YMB711219M2512 1YMB711219M4512	
	250	4	14.40	17.28	CEF		25	292 442	1YMB711221M2512 1YMB711221M4512	
	315	4	18.20	21.84	CEF		31.5	292 442	1YMB711224M2512 1YMB711224M4512	
	400	4	23.10	27.72	CEF		31.5	292 442	1YMB711224M2512 1YMB711224M4512	
	500	4	28.90	34.68	CEF		50	292 442	1YMB711227M2612 1YMB711227M4612	
	630	4	36.40	43.68	CEF		50	292 442	1YMB711227M2612 1YMB711227M4612	
	800	5	46.20	55.44	CEF		63	292 442	1YMB711229M2612 1YMB711229M4612	
	1000	5	57.70	69.24	CEF		80	292 442	1YMB711231M2612 1YMB711231M4612	
	1250	5	72.20	86.64	CEF		100	292 442	1YMB711233M2612 1YMB711233M4612	
	1600	6	92.40	110.88	CEF		125	292[2)] 442	1YMB711235M2812[2)] 1YMB711235M4612	
15 – 17.5	50[1)]	4	1.90	2.28	CEF	10/17.5	6.3	292 367 442	1YMB711713M2512 1YMB711713M3512 1YMB711713M4512	NALF 17.5 kV
	75	4	2.90	3.48	CEF		10	292 367 442	1YMB711716M2512 1YMB711716M3512 1YMB711716M4512	
	100	4	3.80	4.56	CEF		10	292 367 442	1YMB711716M2512 1YMB711716M3512 1YMB711716M4512	
	125	4	4.80	5.76	CEF		10	292 367 442	1YMB711716M2512 1YMB711716M3512 1YMB711716M4512	
	160	4	6.20	7.44	CEF		16	292 367 442	1YMB711718M2512 1YMB711718M3512 1YMB711718M4512	
	200	4	7.70	9.24	CEF		16	292 367 442	1YMB711718M2512 1YMB711718M3512 1YMB711718M4512	
	250	4	9.60	11.52	CEF		20	292 367 442	1YMB711719M2512 1YMB711719M3512 1YMB711719M4512	
	315	4	12.10	14.52	CEF		20	292 367 442	1YMB711719M2512 1YMB711719M3512 1YMB711719M4512	
	400	4	15.40	18.48	CEF		25	292 367 442	1YMB711721M2512 1YMB711721M3512 1YMB711721M4512	

Rated system voltage [kV]	Transformer				Fuse-link					Switch-fuse combination dedicated type
	Rated power S_R [kVA]	Relative impedance voltage u_k [%]	Rated current I_R [A] 100%	Rated current I_R [A] 120 %	Type	Rated voltage U_R [kV]	Rated current I_R [A]	Length e [mm]	Catalogue number	
15 – 17.5	500	4	19.20	23.04	CEF	10/17.5	31.5	292 367 442	1YMB711724M2612 1YMB711724M3512 1YMB711724M4512	NALF 17.5 kV
	630	4	24.20	29.04	CEF		40	292 367 442	1YMB711725M2612 1YMB711725M3512 1YMB711725M4512	
	800	5	30.80	36.96	CEF		40	292 367 442	1YMB711725M2612 1YMB711725M3512 1YMB711725M4512	
	1000	5	38.50	46.20	CEF		50	292[2)] 367 442	1YMB711727M2812[2)] 1YMB711727M3612 1YMB711727M4612	
	1250	5	48.10	57.72	CEF		63	292[2)] 367 442	1YMB711729M2812[2)] 1YMB711729M3612 1YMB711729M4612	
	1600	6	61.60	73.92	CEF		80	292[2)] 367 442	1YMB711731M2812[2)] 1YMB711731M3612 1YMB711731M4612	
	2000	6	77.00	92.40	CEF		100	292[2)] 367[2)] 442	1YMB711733M2812[2)] 1YMB711733M3812[2)] 1YMB711733M4612	
	2500	6	96.20	115.44	CEF		125	367[2)] 442	1YMB711735M3812[2)] 1YMB711735M4812	
20 - 24	50[1)]	4	1.40	1.68	CEF-VT	10/24	4	442	1YMB752411M4512	NALF 24 kV
	75	4	2.20	2.64	CEF		6.3	442 537	1YMB712413M5512 1YMB712413M5512	
	100	4	2.90	3.48	CEF		10	442 537	1YMB712416M5512 1YMB712416M5512	
	125	4	3.60	4.32	CEF		10	442 537	1YMB712416M5512 1YMB712416M5512	
	160	4	4.60	5.52	CEF		10	442 537	1YMB712416M5512 1YMB712416M5512	
	200	4	5.80	6.96	CEF		16	442 537	1YMB712418M5512 1YMB712418M5512	
	250	4	7.20	8.64	CEF		16	442 537	1YMB712418M5512 1YMB712418M5512	
	315	4	9.10	10.92	CEF		20	442 537	1YMB712419M5512 1YMB712419M5512	
	400	4	11.50	13.80	CEF		20	442 537	1YMB712419M5512 1YMB712419M5512	
	500	4	14.40	17.28	CEF		25	442 537	1YMB712421M5512 1YMB712421M5512	
	630	4	18.20	21.84	CEF		31.5	442 537	1YMB712424M5512 1YMB712424M5512	
	800	5	23.10	27.72	CEF		31.5	442 537	1YMB712424M5512 1YMB712424M5512	
	1000	5	28.90	34.68	CEF		40	442 537	1YMB712425M5512 1YMB712425M5512	
	1250	5	36.10	43.32	CEF		50	442 537	1YMB712427M5612 1YMB712427M5612	
	1600	6	46.20	55.44	CEF		63	442 537	1YMB712429M5612 1YMB712429M5612	
	2000	6	57.70	69.24	CEF		80	442 537	1YMB712431M5612 1YMB712431M5612	

Rated system voltage [kV]	Transformer				Fuse-link					Switch-fuse combination dedicated type
	Rated power S_R [kVA]	Relative impedance voltage u_k [%]	Rated current I_R [A] 100%	Rated current I_R [A] 120 %	Type	Rated voltage U_R [kV]	Rated current I_R [A]	Length e [mm]	Catalogue number	
30 – 36	75[1)]	4	1.40	1.68	CEF	20/36	6.3	537	1YMB713613M5512	NALFWind36
	100	4	1.90	2.28	CEF		6.3	537	1YMB713613M5512	
	125	4	2.40	2.88	CEF		6.3	537	1YMB713613M5512	
	160	4	3.10	3.72	CEF		10	537	1YMB713616M5512	
	200	4	3.80	4.56	CEF		10	537	1YMB713616M5512	
	250	4	4.80	5.76	CEF		10	537	1YMB713616M5512	
	315	4	6.10	7.32	CEF		16	537	1YMB713618M5512	
	400	4	7.70	9.24	CEF		16	537	1YMB713618M5512	
	500	4	9.60	11.52	CEF		20	537	1YMB713619M5512	
	630	4	12.10	14.52	CEF		20	537	1YMB713619M5512	
	800	5	15.40	18.48	CEF		25	537	1YMB713621M5512	
	1000	5	19.20	23.04	CEF		25	537	1YMB713621M5512	
	1250	5	24.10	28.92	CEF		31.5	537	1YMB713624M5612	
	1600	6	30.80	36.96	CEF		40	537	1YMB713629M5812	

[1)] Fuse link is not able to clear independently transformer secondary side terminals short circuit current
[2)] Available for 100% load only

—

Reference list for ABB CEF-S fuse-link selection for transformer protection with load 100% and 120%

Rated system voltage [kV]	Transformer				Fuse-link					Switch-fuse combination dedicated type
	Rated power S_R [kVA]	Relative impedance voltage u_k [%]	Rated current I_R [A] 100%	Rated current I_R [A] 120 %	Type	Rated voltage U_R [kV]	Rated current I_R [A]	Length e [mm]	Catalogue number	
10-12	50	4	2.9	3.5	CEF-S	6/12	10	292	1YMB741216M2611	NALF 12 kV
	75	4	4.3	5.2	CEF-S		16	292	1YMB741218M2611	
	100	4	5.8	6.9	CEF-S		20	292	1YMB741219M2611	
	125	4	7.2	8.7	CEF-S		20	292	1YMB741219M2611	
	160	4	9.2	11.1	CEF-S		25	292	1YMB741221M2611	
	200	4	11.5	13.9	CEF-S		40	292	1YMB741225M2611	
	250	4	14.4	17.3	CEF-S		40	292	1YMB741225M2611	
	315	4	18.2	21.8	CEF-S		50	292	1YMB741227M2611	
	400	4	23.1	27.7	CEF-S		63	292	1YMB741229M2611	
	500	4	28.9	34.6	CEF-S		63	292	1YMB741229M2611	
	630[1)]	4	30.3	36.4	CEF-S		63	292	1YMB741229M2611	
20-24	75[4)]	4	2.2	2.6	CEF-S	10/24	10	442	1YMB742416M4611	NALF 24 kV
	100	4	2.9	3.5	CEF-S		10	442	1YMB742416M4611	
	125	4	3.6	4.3	CEF-S		16	442	1YMB742418M4611	
	160	4	4.6	5.5	CEF-S		16	442	1YMB742418M4611	
	200	4	5.8	6.9	CEF-S		20	442	1YMB742419M4611	
	250	4	7.2	8.7	CEF-S		20	442	1YMB742419M4611	
	315	4	9.1	10.9	CEF-S		25	442	1YMB742421M4611	
	400	4	11.5	13.9	CEF-S		40	442	1YMB742425M4611	
	500	4	14.4	17.3	CEF-S		40	442	1YMB742425M4611	
	630	4	18.2	21.8	CEF-S		50	442	1YMB742425M4611	
	800	5	23.1	27.7	CEF-S		50	442	1YMB742425M4611	
	1000[2)]	5	24.1	28.9	CEF-S		50	442	1YMB742425M4611	

Rated system voltage [kV]	Transformer				Fuse-link					Switch-fuse combination dedicated type
	Rated power S_R [kVA]	Relative impedance voltage u_k [%]	Rated current I_R [A] 100%	Rated current I_R [A] 120 %	Type	Rated voltage U_R [kV]	Rated current I_R [A]	Length e [mm]	Catalogue number	
30-36	75[4]	4	1.4	1.7	CEF-S	30/40.5	6.3	537	1YMB744014M5611	NALF Wind 36 kV
	100[4]	4	1.9	2.3	CEF-S		6.3	537	1YMB744014M5611	
	125	4	2.4	2.9	CEF-S		6.3	537	1YMB744014M5611	
	160	4	3.1	3.7	CEF-S		10	537	1YMB744016M5611	
	200	4	3.8	4.6	CEF-S		16	537	1YMB744018M5611	
	250	4	4.8	5.8	CEF-S		16	537	1YMB744018M5611	
	315	4	6.1	7.3	CEF-S		20	537	1YMB744019M5611	
	400	4	7.7	9.2	CEF-S		40	537	1YMB744025M5811	
	500	4	9.6	11.5	CEF-S		40	537	1YMB744025M5811	
	630	4	12.1	14.5	CEF-S		40	537	1YMB744025M5811	
	800	5	15.4	18.5	CEF-S		40	537	1YMB744025M5811	
	1000	5	19.2	23.1	CEF-S		40	537	1YMB744025M5811	
	1250	5	24.1	28.9	CEF-S		40	537	1YMB744025M5811	
	1600	6	30.8	37.0	CEF-S		50	537	1YMB744027M5811	
	2000	6	38.5	46.2	CEF-S		63	537	1YMB744029M5811	
	2500	6	48.1	57.7	CEF-S		63	537	1YMB744029M5811	
	3000[3]	6	48.1	57.7	CEF-S		63	537	1YMB744029M5811	
30-36	25[4]	4	0.5	0.6	CEF-S	30/40.5	6.3	537	1YMB744014M5611	NALF 36
	50[4]	4	1.0	1.2	CEF-S		6.3	537	1YMB744014M5611	
	75[4]	4	1.4	1.7	CEF-S		6.3	537	1YMB744014M5611	
	100	4	1.9	2.3	CEF-S		6.3	537	1YMB744014M5611	
	125	4	2.4	2.9	CEF-S		6.3	537	1YMB744014M5611	
	160	4	3.1	3.7	CEF-S		10	537	1YMB744016M5611	
	200	4	3.8	4.6	CEF-S		16	537	1YMB744018M5611	
	250	4	4.8	5.8	CEF-S		16	537	1YMB744018M5611	
	315	4	6.1	7.3	CEF-S		20	537	1YMB744019M5611	
	400	4	7.7	9.2	CEF-S		25	537	1YMB744021M5611	
	500**	4	9.6	11.5	CEF-S		25	537	1YMB744021M5611	

[1] Rated voltage 12 kV
[2] Rated voltage 24 kV
[3] Rated voltage 36
[4] Fuse link is not able to clear independently transformer secondary side terminals short circuit current
[5] Solution is valid for rated system voltage 36 kV only.
Recommended fuse rating is on the crossing of transformer rating and line voltage. For different line voltage level, please use closest smaller value from the table.
The table was calculated according to standards IEC 60787 and IEC 62271-105 with following assumptions:
- Maximum long lasting transformer current overload – 120%
- Magnetizing transformer inrush current – 12 x Ir during 100ms (up to 800 kVA) or 10 x Ir during 100ms (800 kVA and above)
- Transformer short-circuit voltage according to IEC 60076-5
- No fuse derating due to small enclosures assumed

—

Reference list for fuse-link CEF-S/CEF selection for the transformer protection for Swedish market with 100% and 120% load (§17; fuse with cut off time within 0.1 seconds "Sverigesäkring")

	Transformer				Fuse-link					
Rated system voltage [kV]	Rated power S_R [kVA]	Relative impedance voltage u_k [%]	Rated current I_R [A] 100%	Rated current I_R [A] 120 %	Type	Rated voltage U_R [kV]	Rated current I_R [A]	Length e [mm]	Catalogue number	Switch-fuse combination dedicated type
6.6-7.2	50	4	4.37	5.2	CEF	3/7.2	10	192 292	1YMB710716M1512 1YMB710716M2512	NALF 12 kV
	100	4	8.75	10.5	CEF		20	192 292	1YMB710719M1512 1YMB710719M2512	
	200	4	17.50	21.0	CEF		31.5	192 292	1YMB710724M1512 1YMB710724M2512	
	315	4	27.56	33.1	CEF		50	192 292	1YMB710727M1512 1YMB710727M2512	
	500	4	43.74	52.5	CEF		63	192 292	1YMB710729M1612 1YMB710729M2612	
	630	4	55.11	66.1	CEF		100	192 292	1YMB710733M1612 1YMB710733M2612	
	800	5	69.98	84.0	CEF		100	192 292	1YMB710733M1612 1YMB710733M2612	
	1000	5	87.48	104.9	CEF		125	192 292	1YMB710735M1812[1)] 1YMB710735M2812	
11-12	50	4	2.6	3.1	CEF	6/12	10	292 442	1YMB711216M2512 1YMB711216M4512	NALF 12 kV
	100	4	5.2	6.3	CEF-S		16	292	1YMB741218M2611	
	200	4	10.5	12.6	CEF-S		20	292	1YMB741219M2611	
	315	4	16.5	19.8	CEF-S		25	292	1YMB741221M2611	
	500	4	26.2	31.5	CEF-S		40	292	1YMB741225M2611	
	630	4	33.1	39.7	CEF-S		50	292	1YMB741227M2611	
	800	5	42.0	50.4	CEF-S		63	292	1YMB741229M2611	
	1250	5	65.6	78.7	CEF-S		63	292	1YMB741229M2611	
22-24	50	4	1.3	1.6	CEF	10/24	6.3	442	1YMB711713M4512	NALF 24 kV
	100	4	2.6	3.1	CEF-S		10	442	1YMB742416M4611	
	200	4	5.2	6.3	CEF-S		16	442	1YMB742418M4611	
	315	4	8.3	9.9	CEF-S		16	442	1YMB742418M4611	
	500	4	13.1	15.7	CEF-S		20	442	1YMB742419M4611	
	630	4	16.5	19.8	CEF-S		25	442	1YMB742421M4611	
	800	5	21.0	25.2	CEF-S		40	442	1YMB742425M4611	
	1000	5	26.2	31.5	CEF-S		50	442	1YMB742425M4611	
	1250	5	32.8	39.4	CEF-S		50	442	1YMB742425M4611	

[1)] Available for 100% load only

Ordering examples

NAL 12-12K150LE
Switch-disconnector for 12 kV/1250 A with latched snap action mechanism, pole distance 150 mm. The switch-disconnector is left-hand operated and equipped with a quick-make earthing switch.

Standard supply	Optional accessories
Switch-disconnector	Auxiliary contacts
Single spring operating mechanism	Motor for the operating mechanism
Earthing switch	Auxiliary contacts
Mechanical interlock for earthing switch mounting	Installation on the opposite side
Operating lever	Extended spline shaft length
Connecting Rods	Additional insulation protection Thick-walled reinforced
Hand operating mechanism	Front Bearing directly mounted on side
	Coil for preventing lever operation in earth switch
	Transmission 90º complete

NALF 12-4A150HRE
Switch-fuse combination with extended creepage distance for 12 kV/400 A with stored spring energy mechanism type A, equipped with fuse base on the pivot side and earthing switch, with fuse-tripping device, pole distance 150 mm, right-hand operated.

Standard supply	Optional accessories
Switch-fuse combination	Auxiliary contacts
Double spring operating mechanism	Motor for the operating mechanism Shunt opening release
Tripping system in case of blown fuses	Auxiliary contacts for fuse interruption
Earthing switch	Auxiliary contacts
Mechanical interlock for earthing switch mounting	Installation on the opposite side
Operating lever	Extended spline shaft length
Connecting rods	Additional insulation protection Thick-walled reinforced
Hand operating mechanism	Front bearing directly mounted on side
	Coil for preventing lever operation in earth switch
	Transmission 90º complete
Current limiting fuse-links	ABB CEF reference fuse-links list-see page 11-16

NALF 24-6A235RE
Switch-fuse combination for 24 kV/630 A with stored spring energy mechanism type A, equipped with fuse base on the pivot side and earthing switch, with fuse-tripping device, pole distance 235 mm, right-hand operated.

Standard supply	Optional accessories
Switch-fuse combination	Auxiliary contacts
Double spring operating mechanism	Motor for the operating mechanism Shunt opening release
Tripping system in case of blown fuses	Auxiliary contacts for fuse interruption
Earthing switch	Auxiliary contacts
Mechanical interlock for earthing switch mounting	Installation on the opposite side
Operating lever	Extended spline shaft length
Connecting rods	Additional insulation protection Thick-walled reinforced
Hand operating mechanism	Front Bearing directly mounted on side
	Coil for preventing lever operation in earth switch
	Transmission 90º complete
Current limiting fuse-links	ABB CEF reference fuse-links list- see page 11-16

—

Electrical characteristics of switch-disconnector type NAL–12 kV according to IEC 62271-103:2011

Rated voltage	U_r	kV		12	
Rated current	I	A	400	630	1250
Rated continuous current	I_r	A	400	630	1150
Rated short-circuit making current	I_{ma}	kA peak		67	
Rated peak withstand current	I_p	kA peak		82	
Rated short-time withstand current					
1s	I_k	kA r.m.s.	31.5	31.5	31.5
2s			25	25	25
Rated mainly active load-breaking current	I_{load}	A	400	630	1250
Rated closed-loop breaking current	I_{loop}	A	400	630	1250
Rated cable-charging breaking current	I_{cc}	A	150	150	
Rated line-charging breaking current	I_{lc}	A	1	1	
Rated earth fault breaking current	I_{ef1}	A	150	150	
Rated cable-and line-charging breaking current under earth fault conditions	I_{ef2}	A	90	90	
Rated power-frequency withstand voltage					
Common value	U_d	kV		28[1)]	
Across the isolating distance				32[1)]	
Rated lightning impulse withstand voltage					
Common value	U_p	kV		75	
Across the isolating distance				85	
Rated frequency	f_r	Hz		50	
Pole distance		mm		150; 170; 210	
Max. operating torque on the spring mechanism shaft		Nm		110	
Opening time		ms		40-60	
Max. arcing time		ms		10	
Temperature class		°C		-40 +40[2)]	
Mechanical endurance class		-		M1	
Electrical endurance class		-	E3	E3	
Capacitive switching class		-	C2	C2	
Service condition class acc. IEC 62271-304:2008				Class 0	

—

Electrical characteristics of switch–fuse combination type NALF–12 kV according to IEC 62271-105:2012

Rated voltage	U_r	kV	12
Rated normal current with fuses	I	A	125[3)]
Rated short-circuit breaking current	I1	kA r.m.s.	63
Rated transfer current	$I_{rtransfer}$	A	1600
Rated take-over current	I_{lto}	A	1450
Making and breaking test at the rated short-circuit current[6)]	I_{sc}	kA	158
Making and breaking test at the maximum breaking I^2t[6)]	I_{wmax}	A	5170
Rated power-frequency withstand voltage			
Common value	U_d	kV	28[1)]
Across the isolating distance			32[1)]
Rated lightning impulse withstand voltage			
Common value	U_p	kV	75
Across the isolating distance			85
Rated frequency	f_r	Hz	50
Pole distance		mm	150; 170; 210
Max. operating torque on the spring mechanism shaft		Nm	110
Opening time		ms	40-60
Max. arcing time		ms	12
Temperature class		°C	-40 +40[2)]
Service condition class acc. IEC/TS 62271-304:2008			Class 0

Above values are valid for CEF fuse-link family produced by ABB. Other fuse-links can be used if IEC 62271-105 ed. 2.0 closure 8.102 is met. Maximum allowable load of fuse-links depends on real application conditions.

Electrical characteristics of earthing switch type E for NAL/NALF and stand-alone type EB[4] according to IEC 62271-102:2018

Rated voltage	U_r	kV	12
Rated frequency	f_r	Hz	50
Rated peak withstand current	I_p	kA peak	82[5]
Rated short-time withstand current (1s)	I_k	kA r.m.s.	31.5
Rated short-circuit making current	I_{ma}	kA peak	67[5]
Rated power-frequency withstand voltage	U_d	kV	28[1]
Rated lightning impulse withstand voltage	U_p	kV	75
Pole distance		mm	150; 170; 210
Mechanical endurance class		-	M0
Short-circuit making capability class		-	E2
Minimum and maximum ambient air temperature		°C	-40+40[2]

[1] Higher value (42 kV) available based on agreement with manufacturer
[2] For special application +55°C is available based on agreement with manufacturer.
[3] 125 A valid for CEF 12 kV 125 A. For other fuses max rated current with fuses can be reduced according to standard requirements.
[4] Mechanical interlocking can be fitted.
[5] When fed from moving contact side.
[6] Valid for reference fuse-links type ABB CEF only

Electrical characteristics of switch-disconnector type NAL– H 12 kV according to IEC 62271-103:2011

Rated voltage	U_r	kV		12	
Rated current	I	A	400	630	1250
Rated continuous current	I_r	A	400	630	1150
Rated short-circuit making current	I_{ma}	kA peak		67	
Rated peak withstand current	I_p	kA peak		82	
Rated short-time withstand current					
1s	I_k	kA r.m.s.	31.5	31.5	31.5
2s			25	25	25
Rated mainly active load-breaking current	I_{load}	A	400	630	1250
Rated closed-loop breaking current	I_{loop}	A	400	630	1250
Rated cable-charging breaking current	I_{cc}	A	150	150	
Rated line-charging breaking current	I_{lc}	A	1	1	
Rated earth fault breaking current	I_{ef1}	A	150	150	
Rated cable-and line-charging breaking current under earth fault conditions	I_{ef2}	A	90	90	
Rated power-frequency withstand voltage					
Common value	U_d	kV		28[1]	
Across the isolating distance				32[1]	
Rated lightning impulse withstand voltage					
Common value	U_p	kV		75	
Across the isolating distance				85	
Rated frequency	f_r	Hz		50	
Pole distance		mm		150; 170; 210	
Max. operating torque on the spring mechanism shaft		Nm		110	
Opening time		ms		40-60	
Max. arcing time		ms		10	
Temperature class		°C		-40 +40[2]	
Mechanical endurance class		-		M1	
Electrical endurance class		-	E3	E3	
Capacitive switching class		-	C2	C2	

—

Switch-fuse combination type NALF – H 12 kV according to IEC 62271-105:2012

Rated voltage	U_r	kV	12
Rated normal current with fuses	I	A	125[3]
Rated short-circuit breaking current	I_1	kA r.m.s.	63
Rated transfer current	$I_{rtransfer}$	A	1600
Rated take-over current	I_{Ito}	A	1450
Making and breaking test at the rated short-circuit current[6]	I_{sc}	kA	158
Making and breaking test at the maximum breaking I^2t[6]	I_{wmax}	A	5170
Rated power-frequency withstand voltage			
Common value	U_d	kV	28[1]
Across the isolating distance			32[1]
Rated lightning impulse withstand voltage			
Common value	U_p	kV	75
Across the isolating distance			85
Rated frequency	f_r	Hz	50
Pole distance		mm	150; 170; 210
Max. operating torque on the spring mechanism shaft		Nm	110
Opening time		ms	40-60
Max. arcing time		ms	12
Temperature class		°C	-40 +40[2]

Above values are valid for CEF fuse-link family produced by ABB. Other fuse-links can be used if IEC 62271-105 ed. 2.0 closure 8.102 is met.
Maximum allowable load of fuse-links depends on real application conditions

—

Earthing switch type E for NAL-H/NALF–H and stand alone type EB[4] according to IEC 62271-102:2018

Rated voltage		U_r	kV	12
Rated frequency		f_r	Hz	50
Rated peak withstand current		I_p	kA peak	82[5]
Rated short-time withstand current	1s	I_k	kA r.m.s.	31.5
Rated short-circuit making current		I_{ma}	kA peak	67[5]
Rated power-frequency withstand voltage		U_d	kV	28[1]
Rated lightning impulse withstand voltage		U_p	kV	75
Pole distance			mm	150; 170; 210
Mechanical endurance class			-	M0
Short-circuit making capability class			-	E2
Minimum and maximum ambient air temperature			°C	-40+40[2]

[1] Higher (42kV) value available based on agreement with manufacturer.
[2] For special application +55°C is available based on agreement with manufacturer.
[3] Current 125 A valid for CEF 12 kV 125 A. For other fuses max rated current with fuses can be reduced according to standard requirements.
[4] Mechanical interlocking can be fitted.
[5] When fed from moving contact side.
[6] Valid for reference fuse-links type ABB CEF only

—

General characteristics of switch-disconnector type NAL-17.5/NAL-24 and switch–fuse combination type NALF-17.5/NALF-24 ABB confirms that the ratings declared below were tested and fulfil requirements of listed standards: IEC 265; IEC 129; IEC 62271-1; IEC 62271-102; IEC62271-103; IEC 62271-105

Rated voltage		U_n	kV	17.5		24	
Rated current		I_n	A	400	630	400	630
Max. rated current		I	A	400	630	400	630
Short circuit making capacity		I_{ma}	kA peak.	50	50	50	50
Peak withstand current		I_{dyn}	kA peak.	82	82	82	82
Short time current	1 s	I_{th}	kA r.m.s.	31.5	31.5	31.5	31.5
	2 s			25	25	25	25
	3 s			16	16	16	16
Mainly active load breaking capacity[1] (test duty 1 and 2, IEC 60265-1 (IEC 265))		I	A	400	630	400	630
Rated cable/line charging breaking capacity (IEC 60265-1(IEC 265))		I	A	100[5]	100[5]	80	80
Rated earth fault breaking capacity	Earth fault breaking capacity, fig. 6	I	A	70	70	75	75
	Capacitive breaking capacity, fig. 7			40	40	31.5	31.5
Max. breaking capacity in co-operation with fuses			A	1600	1600	900	900
Max. rated current of fuse-link[2]		I_n	A	125[8]	125[8]	80	80
Rated power-frequency withstand voltage	Common value		kV	38[6]		50[6]	
	Across the isolating distance			45[7]		60[7]	
Rated lightning impulse withstand voltage	Common value		kV	95		125	
	Across the isolating distance			110		145	
Pole distance			mm	170; 210		235; 275	
Max. operating torque at:	closing K/A mech.		Nm	115–120 Nm			
	opening K/A mech.			K mech. 120 Nm/A mech. 3 Nm			
Operating angle on the shaft			degrees	130			
Arcing time			ms	10 – 20			
Opening time			ms	40 – 60			
Service condition class acc. IEC/TS 62271-304:2008				Class 0			

Above values are valid for CEF fuse-link family produced by ABB. Other fuse-links can be used if IEC 62271-105 ed. 2.0 closure 8.102 is met.
Maximum allowable load of fuse-links depends on real application conditions

—

General characteristics of earthing switch type E for NAL-17.5/NAL-24 and NALF-17.5/NALF-24 and stand-alone type EB[3] ABB confirms that the ratings declared below were tested and fulfil requirements of listed standards: IEC 129; IEC 694 IEC 62271-1; IEC 62271-102

Rated voltage	U_n	kV	17.5	24
Peak withstand current[4]	I_{dyn}	kA peak.	40/82	38/82
Short-circuit current (1s)	I_{th}	kA eff.	31.5	31.5
Short-circuit making capacity	I_{ma}	kA peak.	40/52	40/50
Rated power-frequency withstand voltage		kV	38	50
Rated lightning impulse withstand voltage		kV	95	125
Pole distance		mm	170; 210	235; 275

[1] At In = 630A, 100xCO.
[2] Valid for ABB CEF fuse-link only. For other fuses max rated current with fuses can be reduced according to standard requirements.
[3] Mechanical interlocking can be fitted.
[4] When fed from switch-disconnector/earthing switch side.
[5] At 18.2 kV
[6] Higher value:
– 45 kV for NAL 17,
– 55 kV for NAL 24
available based on agreement with manufacturer.
[7] Higher value:
– 60 kV for NAL 17,
– 70 kV for NAL 24
available based on agreement with manufacturer.
[8] 125 A available for ABB CEF fuse-links with 367 and 442 mm length only.

—

General characteristics of switch-disconnector type NAL – H 24 and switch – fuse combination type NALF – H 24 kV
ABB confirms that the ratings declared below were tested and fulfil requirements of listed standards: IEC 265; IEC 129; IEC 62271-1; IEC 62271-102; IEC62271-103; IEC 62271-105

Rated voltage		U_n	kV	24	
Rated current		I_n	A	400	630
Max. rated current		In	A	400	630
Peak withstand current		I_{dyn}	kA peak	82	
Short time current	1s	I_{th}	kA r.m.s.	31.5	
	2s			25	
	3s			16	
Mainly active load breaking capacity[1] (test duty 1 and 2, IEC 60265-1 (IEC 265))			A	400	630
Rated cable/line charging breaking capacity			A	80	
Rated earth fault breaking capacity	Earth fault breaking capacity, fig. 6		A	75	
	Capacitive breaking capacity, fig. 7			31.5	
Max. breaking capacity in co-operation with fuses			A	900	
Max. rated current of the fuse[2]			A	80	
Rated power-frequency withstand voltage	Common value		kV	50	
	Across the isolating distance			60	
Rated lightning impulse withstand voltage	Common value		kV	125	
	Across the isolating distance			145	
Pole distance			mm	235; 275	
Max. operating torque at	closing K/A mech.		Nm	115-120	
	opening K mech.			120	
	opening/A mech.			3	
Operating angle on the shaft			degree	130	
Opening time			ms	40-60	
Arc time			ms	10-20	
Service condition class acc. IEC/TS 62271-304:2008				Class 2	

Above values are valid for CEF fuse-link family produced by ABB. Other fuse-links can be used if IEC 62271-105 ed. 2.0 closure 6.105.3 is met.

—

General characteristics of earthing switch type E for NAL-H/NALF-H and stand-alone type EB[3]
ABB confirms that the ratings declared below were tested and fulfil requirements of listed standards: IEC 129; IEC 694; IEC 62271-1; IEC 62271-102;

Rated voltage	U_n	kV	24
Peak withstand current[4]	I_{dyn}	kA peak	38/82
Short-circuit current (1s)	I_{th}	kA r.m.s.	31.5
Short circuit making capacity[4]	I_{ma}	kA peak	38/50
Rated power-frequency withstand voltage		kV	50
Rated lightning impulse withstand voltage		kV	125
Pole distance		mm	235; 275

[1] At I_n = 630A, 100xCO.
[2] Current 80 A valid for ABB CEF 24 kV 80 A. For other fuses max rated current with fuses can be reduced according to standard requirements.
[3] Mechanical interlocking can be fitted.
[4] When fed from switch-disconnector/earthing switch side.

—

General characteristics of switch–fuse combination type NALF–36 kV. ABB confirms that the ratings declared below were tested and fulfill requirements of listed standards: IEC 62271-105:2012; IEC 60282-1:2009

Rated voltage		kV	36
Rated frequency		Hz	50
Power frequency withstand voltage	Common value	kV	80
	Across the isolating distance		88
Lightning impulse withstand voltage	Common value	kV	170
	Across the isolating distance		195
Rated mainly active load-breaking current[1)]		A	800
Rated normal current with fuses[2)]		A	25
Max fuse rating (based on transfer current)[2)]		A	25
Rated transfer current (striker operation)		A	122
Rated short-circuit breaking current with fuses		kA r.m.s.	20
Rated making and breaking tests at the maximum breaking I^2t		A r.m.s.	614
Rated short-circuit making current with fuses		kA peak	50
Pole distance		mm	360
Ambient temperature range		°C	-40 +40
Mechanical endurance of disconnector and earthing switch		C/O	1000
Application			Indoor
Service condition class acc. IEC 62271-304			Class 0

[1)] The values only for switch
[2)] Max fuse size ref. to time current characteristics for CEF-S 30/40.5 kV 25A

—

General characteristics of switch-disconnector type NAL–36 kV. ABB confirms that the ratings declared below were tested and fulfill requirements of listed standards: IEC 694:1980; IEC 60265-1:1998 Ed. 3

Rated voltage (U_r)		kV		36	
Rated frequency (f_r)		Hz		50	
Power frequency withstand voltage	Common value	kV		80	
	Across the isolating distance			88	
Lightning impulse withstand voltage (U_w)	Common value	kV		170	
	Across the isolating distance			195	
Rated normal current (I_r)		A	630	800	1000
Rated mainly active load breaking current (I_1)		A	630	800	800
Number of operation for mainly active load breaking (n)		-	100	10	10
Rated distribution line closed-loop breaking current (I_{2a})		A		1250	
Rated short-circuit making current (I_{ma})		kA peak		50	
Rated peak withstand current		kA peak		82	
Rated short-time current (I_k)		kA RMS	31.5		25
Rated duration of short-time current (t_k)		s	1		2
Pole distance		mm		360	
Ambient temperature range		°C		-40 +40	
Mechanical endurance of switch disconnector		C/O		1000	
Application				Indoor normal service condition	
Service condition class acc. IEC 62271-304					Class 0

—

General characteristics of earthing switch type E for NAL/NALF-H and stand-alone type EB[3)].
ABB confirms that the ratings declared below were tested and fulfil requirements of listed standards: IEC 129; IEC 694; IEC 62271-1; IEC 62271-102;

Rated voltage	U_n	kV	36
Peak withstand current[4)]	I_{dyn}	kA peak.	82
Short time current (1s)	I_{th}	kA eff.	31.5
Short circuit making capacity[4)]	I_{ma}	kA peak.	40
Rated power-frequency withstand voltage		kV	80
Rated lightning impulse withstand voltage		kV	170
Pole distance		mm	360

[3)] Mechanical interlocking can be fitted.
[4)] When fed from switch-disconnector/earthing switch side.

—
08 NAL 12

—
09 NALF 12

—
10 Lower part of fuse base with earthing switch

—
11 Mechanism A

—
Technical data according to CSA certification file (NAL)

Type name		NAL 12	NAL 17	NAL 24	NAL 36
Rated voltage	kV	4.16	13.8	27.6	34.5
Rated maximum voltage	kV	4.76	15	29.8	38
Rated current	A	600/1200	600/1200	600/1200[1)]	600/800
Rated lightning impulse withstand voltage	kV	60	95	125	150
Rated power-frequency withstand voltage	kV	28	38	60	80
Pole spacing	mm/inch		170/6.69		
		150/5.9	210/8.25	235/9.25[1)]	
		210/8.25	235/9.25	275/10.8	360/14.1
Momentary rating asymmetrical	kA eff.	40	40	40	40
Fault-closing rated current asymmetrical	kA eff.	40	40	40	30
Short time current symmetrical	kA eff./sec	25/2	25/2	25/2	25/2

[1)] 1200A version requires insulation plates between each phases.

NAL
The standard feature consists of chassis, insulators and current carrying parts with the following pole distance:
- 12 kV – pole distance 150 mm, 170 mm and 210 mm
- 17.5 kV – pole distance 170 mm and 210 mm
- 24 kV – pole distance 235 mm and 275 mm
- 36 kV – pole distance 360 mm

Rated currents are:
- 400, 630 and 1250 A (for 12 kV only) up to 24 kV
- 630/800/1000 A for 36 kV

—
08

NALF
Is delivered with the same pole distances as the standard feature. Fuse base type F is delivered for installation on both the opening and pivot sides, with or without automatic tripping.

—
09

Fuse bases and recommended current limiting fuses
Fuse base type F
Variable with or without automatic tripping of the switch by the fuse-link striker system. The fuse base can be mounted on both sides (i.e. opening side or pivot side of the switch).
Recommended current limiting fuses for switch--fuse combination NALF (for fuse-base with fuse tripping system).
ABB fuse types CEF, CEF-VT (with striker pin) and CEF-S are recommended for use with the NALF switch-disconnector with fuse tripping system. These fuses are reference fuses as defined in IEC 62271-105. The selection of fuses to protect distribution transformers with appropriate assumptions about the working conditions and manner of selection are shown in the reference fuse-link tables on the pages 11-16.

—
10

Mechanisms
Type A with two springs
The opening spring is always charged before the switch can be closed by means of a closing spring. This means the opening spring is always charged in a closed switch, which in turn can be tripped immediately by hand, electrically or by a fuse-link striker system.

—
11

—
12 Mechanism K

—
13 Quick earthing switch type E

—
14 Quick earthing switch type EB

—
15 Mechanical interlocking

—
16 Manual operation of HE consists of:
a) lower part (front bearing)
b) upper part (bevel gear)
c) lower part for HE with blocking coil
d) connecting rod
e) manual operating handle

Type K with one spring
Closing or opening the switch is performed by charging the spring past the dead centre.
A and K mechanisms may cooperate with motor drives.

—
12

Earthing switch
Quick earthing switch type E
This type of earthing switch is equipped with a quick spring mechanism. It can be mounted on the pivot side of the switch-disconnector or on the fuse base when the latter is on the pivot side of the switch.

—
13

Quick earthing switch type EB
Designed to be an independent assembly for both sides of the disconnector.

—
14

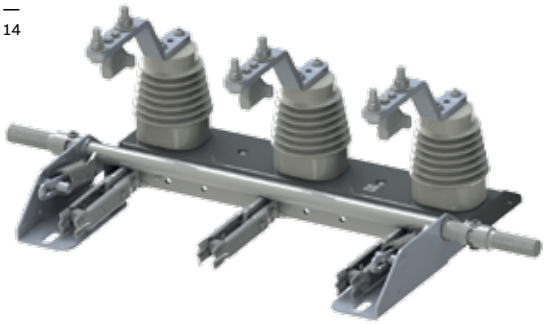

Mechanical interlocking
Mechanical interlocking between switch-disconnector and earthing switch. At the earthing switch on the fuse base, the interlocking type (length) depends on the length of the fuse. Therefore, the fuse size must be stated. Mechanical interlocking can also be used for switch-disconnector and EB earthing switch.

—
15

Manual operation HE for switch-disconnector and earthing switch
Please observe!
The mechanism shaft does not pass through the switch from the mechanism on the right-hand side to the left side. Instead a special extension shaft is needed for operation of the mechanism from the left-hand side.

—
16

a)

b)

c)

d)

e)

—
17 Switch-disconnector NALF 24 H

—
NAL switch-disconnector and NALF switch-fuse combination 12 kV – H version

Type	Rated voltage [kV]	Rated current [A]	Pole distance [mm]	Ordering number	Weight [kg]
NAL 12-6 K 150H R	12	630	150	1YMX054011M9001	35
NAL 12-6 K 150H L	12	630	150	1YMX501211M9001	35
NAL 12-6 A 150H R	12	630	150	1YMX054041M9001	37
NAL 12-6 A 150H L	12	630	150	1YMX501221M9001	37
NAL 12-6 K 150H RE w/o mechanical interlocking	12	630	150	1YMX500004M9002	37
NAL 12-6 K 150H LE w/o mechanical interlocking	12	630	150	1YMX500004M9001	37
NALF 12-6 A 150H R	12	630	150	1YMX054091M9001	37
NALF 12-6 A 150H L	12	630	150	1YMX511221M9001	37
NALF 12-4 A 150H RE w/o mechanical interlocking	12	400	150	1YMX500003M9002	37
NALF 12-6 A 150H LE w/o mechanical interlocking	12	630	150	1YMX500003M9001	37

—
NAL switch-disconnector and NALF switch-fuse combination 24 kV - H version

Type	Rated voltage [kV]	Rated current [A]	Pole distance [mm]	Ordering number	Weight [kg]
NAL 24-6 K24 235H R	24	630	235	1YMX054017M9001	45
NAL 24-6 K24 235H L	24	630	235	1YMX503114M9001	45
NAL 24-6 A 235H R	24	630	235	1YMX054047M9001	45
NAL 24-6 A 235H L	24	630	235	1YMX503224M9001	45
NAL 24-6 K 275H R	24	630	275	1YMX054411M9001	48
NAL 24-6 K24 235H E L	24	630	235	1YMX503214M9101	52
NAL 24-6 K24 235H E R	24	630	235	1YMX503214M9111	52
NAL 24-6 K 235H LE w/o mechanical interlocking	24	630	235	1YMX500002M9001	52
NALF 24-6 A24 235H R	24	630	235	1YMX054095M9001	58
NALF 24-6 A24 235H L	24	630	235	1YMX513224M9001	58
NALF 24-4 A24 235H E R	24	400	235	1YMX513124M9101	65
NALF 24-6 A24 235H E L	24	630	235	1YMX513224M9101	65
NALF 24-6 A 235H LE w/o mechanical interlocking	24	630	235	1YMX500001M9001	65
NALF 24-6 A24 235H L opening side fuse base	24	630	235	1YMX313224M9001	58
NALF 24-6 A 275H R	24	630	275	1YMX054436M9001	63
NALF 24-6 A P235H R with upper fuse base and ES	24	630	235	1YMX888671M0001	65
NALF 24-6 A P275H R with upper fuse base and ES	24	630	275	1YMX888671M0002	70

—
Earthing switch for switch-disconnector and switch-fuse combination – H version

Type	Rated voltage [kV]	Rated current [A]	Pole distance [mm]	Ordering number	Weight [kg]
Earthing switch E24/630A-235 H	24	630	235	1YMX054237M9001	9

Ordering information

—

Switch-disconnector with operating mechanism (K)

Type	Rated voltage [kV]	Rated current [A]	Pole distance [mm]	Ordering number	Weight [kg]
NAL 12-4K150R	12	400	150	1YMX054010M0001	30
NAL 12-4K170R	12	400	170	1YMX065170M0001	30
NAL 12-4K210R	12	400	210	1YMX054910M0001	30
NAL 12-6K150R	12	630	150	1YMX054011M0001	30
NAL 12-6K170R	12	630	170	1YMX065170M0002	30
NAL 12-6K210R	12	630	210	1YMX054911M0001	30
NAL 12-12K150R	12	1250	150	1YMX054012M0001	31
NAL 12-12K170R	12	1250	170	1YMX065170M0003	31
NAL 12-12K210R	12	1250	210	1YMX054912M0001	31
NAL 17-4K170R	17.5	400	170	1YMX054013M0001	32
NAL 17-4K24 170R	17.5	400	170	1YMX054013M0002	32
NAL 17-4K210R	17.5	400	210	1YMX065210M0001	32
NAL 17-4K24 210R	17.5	400	210	1YMX065210M0002	32
NAL 17-6K170R	17.5	630	170	1YMX054014M0001	32
NAL 17-6K24 170R	17.5	630	170	1YMX054014M0002	32
NAL 17-6K210R	17.5	630	210	1YMX065210M0006	32
NAL 17-6K24 210R	17.5	630	210	1YMX065210M0005	32
NAL 24-4K235R	24	400	235	1YMX054016M0001	40
NAL 24-4K275R	24	400	275	1YMX054410M0001	40
NAL 24-6K235R	24	630	235	1YMX054017M0001	40
NAL 24-6K275R	24	630	275	1YMX054411M0001	40
NAL 36-6K360R	36	630	360	1YMX054313M0001	67
NAL 36-8K360R	36	800	360	1YMX054314M0001	67
NAL 36-10K360R	36	1000	360	1YMX054315M0001	67

—

Switch-disconnector CSA with operating mechanism K

Type	Rated voltage [kV]	Rated current [A]	Pole distance [mm]	Ordering number	Weight [kg]
NAL 12-6K 150R	4.16	600	150	1YMX084011M0001	30
NAL 12-12K 150R	4.16	1200	150	1YMX084012M0001	31
NAL 12-6K 210R	4.16	600	210	1YMX084911M0001	30
NAL 12-12K 210R	4.16	1200	210	1YMX084912M0001	31
NAL 17-6K 170R	13.8	600	170	1YMX084014M0001	32
NAL 17-12K 170R	13.8	1200	170	1YMX084015M0001	33
NAL 17-6K24 170R	13.8	600	170	1YMX084014M0002	32
NAL 17-12K24 170R	13.8	1200	170	1YMX084015M0002	33
NAL 17-6K 210R	13.8	600	210	1YMX085210M0002	32
NAL 17-12K 210R	13.8	1200	210	1YMX085210M0003	33
NAL 17-6K24 210R	13.8	600	210	1YMX085210M0004	32
NAL 17-12K24 210R	13.8	1200	210	1YMX085210M0005	33
NAL 17-6K 235R	13.8	600	235	1YMX084017M0001	40
NAL 17-12K 235R	13.8	1200	235	1YMX084018M0001	41
NAL 17-6K24 235R	13.8	600	235	1YMX084017M0002	40
NAL 17-12K24 235R	13.8	1200	235	1YMX084018M0002	41
NAL 24-6K 235R	27.6	600	235	1YMX184017M0001	40
NAL 24-12K 235R	27.6	1200	235	1YMX184018M0001	41
NAL 24-6K 275R	27.6	600	275	1YMX084411M0001	40
NAL 24-12K 275R	27.6	1200	275	1YMX084412M0001	41
NAL 36-6K 360R	34.5	600	360	1YMX084363M0001	62
NAL 36-8K 360R	34.5	800	360	1YMX084314M0001	62

—

Switch-disconnector CSA with fuse base, operating mechanism K, without fuse tripping

Type	Rated voltage [kV]	Rated current [A]	Pole distance [mm]	Ordering number	Weight [kg]
NALF 12-6K 150R	4.16	600	150	1YMX084071M0001	39
NALF 12-6K 210R	4.16	600	210	1YMX084926M0001	39
NALF 17-6K 170R	13.8	600	170	1YMX084073M0002	42
NALF 17-6K24 170R	13.8	600	170	1YMX084073M0001	42
NALF 17-6K 210R	13.8	600	210	1YMX088210M0002	42
NALF 17-6K24 210R	13.8	600	210	1YMX088210M0003	42
NALF 17-6K 235R	13.8	600	235	1YMX084075M0001	51
NALF 24-6K 235R	27.6	600	235	1YMX184075M0001	51
NALF 24-6K 275R	27.6	600	275	1YMX084426M0001	51
NALF 36-6K 360R	34.5	600	360	1YMX084322M0001	68
NALF 36-8K 360R	34.5	800	360	1YMX084323M0001	68

—
Switch-disconnector CSA with operating mechanism A

Type	Rated voltage [kV]	Rated current [A]	Pole distance [mm]	Ordering number	Weight [kg]
NAL 12-6A 150R	4.16	600	150	1YMX084041M0001	32
NAL 12-12A 150R	4.16	1200	150	1YMX084042M0001	33
NAL 12-6A 210R	4.16	600	210	1YMX084921M0001	32
NAL 12-12A 210R	4.16	1200	210	1YMX084922M0001	33
NAL 17-6A 170R	13.8	600	170	1YMX084404M0001	34
NAL 17-12A 170R	13.8	1200	170	1YMX084045M0001	35
NAL 17-6A24 170R	13.8	600	170	1YMX084404M0002	34
NAL 17-12A24 170R	13.8	1200	170	1YMX084045M0002	35
NAL 17-6A 210AR	13.8	600	210	1YMX087210M0002	34
NAL 17-12A 210AR	13.8	1200	210	1YMX087210M0003	35
NAL 17-6A24 210R	13.8	600	210	1YMX087210M0004	42
NAL 17-12A24 210R	13.8	1200	210	1YMX087210M0005	43
NAL 17-6A 235R	13.8	600	235	1YMX084047M0001	42
NAL 17-12A 235R	13.8	1200	235	1YMX084048M0001	43
NAL 17-6A24 235R	13.8	600	235	1YMX084047M0002	42
NAL 17-12A24 235R	13.8	1200	235	1YMX084048M0002	43
NAL 24-6A24 235R	27.6	600	235	1YMX184047M0001	42
NAL 24-12A24 235R	27.6	1200	235	1YMX184048M0001	43
NAL 24-6A24 275R	27.6	600	275	1YMX084421M0001	42
NAL 24-12A24 275R	27.6	1200	275	1YMX084422M0001	43
NAL 34-6A 360R	34.5	600	360	1YMX084319M0001	62
NAL 34-8A 360R	34.5	800	360	1YMX084320M0001	62

—
Switch-disconnector CSA with fuse base, operating mechanism A, with fuse tripping

Type	Rated voltage [kV]	Rated current [A]	Pole distance [mm]	Ordering number	Weight [kg]
NALF 12-6A 150R	4.16	600	150	1YMX084091M0001	41
NALF 12-6A 210R	4.16	600	210	1YMX084936M0001	41
NALF 17-6A 170R	13.8	600	170	1YMX084093M0001	44
NALF 17-6A24 170R	13.8	600	170	1YMX084093M0002	44
NALF 17-6A 210R	13.8	600	210	1YMX080210M0002	44
NALF 17-6A24 210R	13.8	600	210	1YMX080210M0003	44
NALF 17-6A 235R	13.8	600	235	1YMX084095M0001	53
NALF 24-6A24 235R	27.6	600	235	1YMX184095M0001	53
NALF 24-6A24 275R	27.6	600	275	1YMX084436M0001	53
NALF 36-6A 360R	34.5	600	360	1YMX084328M0001	70
NALF 36-8A 360R	34.5	800	360	1YMX084329M0001	70

—
18 NAL 12-6 12 kV switch-disconnector with K mechanism

—
Switch-disconnector with operating mechanism (A)

Type	Rated voltage [kV]	Rated current [A]	Pole distance [mm]	Ordering number	Weight [kg]
NAL 12-4A150R	12	400	150	1YMX054040M0001	32
NAL 12-4A170R	12	400	170	1YMX067170M0001	32
NAL 12-4A210R	12	400	210	1YMX054920M0001	32
NAL 12-6A150R	12	630	150	1YMX054041M0001	32
NAL 12-6A170R	12	630	170	1YMX067170M0002	32
NAL 12-6A210R	12	630	210	1YMX054921M0001	32
NAL 12-12A150R	12	1250	150	1YMX054042M0001	33
NAL 12-12A170R	12	1250	170	1YMX067170M0003	33
NAL 12-12A210R	12	1250	210	1YMX054922M0001	33
NAL 17-4A170R	17.5	400	170	1YMX054043M0001	34
NAL 17-4A24 170R	17.5	400	170	1YMX054043M0002	34
NAL 17-4A210R	17.5	400	210	1YMX067210M0001	34
NAL 17-4A24 210R	17.5	400	210	1YMX067210M0002	34
NAL 17-6A170R	17.5	630	170	1YMX054044M0001	34
NAL 17-6A24 170R	17.5	630	170	1YMX054044M0002	34
NAL 17-6A210R	17.5	630	210	1YMX067210M0006	34
NAL 17-6A24 210R	17.5	630	210	1YMX067210M0005	34
NAL 24-4A235R	24	400	235	1YMX054046M0001	42
NAL 24-4A275R	24	400	275	1YMX054420M0001	42
NAL 24-6A235R	24	630	235	1YMX054047M0001	42
NAL 24-6A275R	24	630	275	1YMX054421M0001	42
NAL 36-6A360R	36	630	360	1YMX054319M0001	68
NAL 36-8A360R	36	800	360	1YMX054320M0001	68
NAL 36-10A360R	36	1000	360	1YMX054321M0001	68

—
Switch-disconnector with fuse base on pivot side, operating mechanism K, without fuse tripping

Type	Rated voltage [kV]	Rated current [A]	Pole distance [mm]	Ordering number	Weight [kg]
NALF 12-4K150R	12	400	150	1YMX054070M0001	39
NALF 12-4K170R	12	400	170	1YMX068170M0001	39
NALF 12-4K210R	12	400	210	1YMX054925M0001	39
NALF 12-6K150R	12	630	150	1YMX054071M0001	39
NALF 12-6K170R	12	630	170	1YMX068170M0002	39
NALF 12-6K210R	12	630	210	1YMX054926M0001	39
NALF 17-4K170R	17.5	400	170	1YMX054072M0001	42
NALF 17-4K24 170R	17.5	400	170	1YMX054072M0002	42
NALF 17-4K210R	17.5	400	210	1YMX068210M0001	42
NALF 17-4K24 210R	17.5	400	210	1YMX068210M0003	42
NALF 17-6K170R	17.5	630	170	1YMX054073M0001	42
NALF 17-6K24 170R	17.5	630	170	1YMX054073M0002	42
NALF 17-6K210R	17.5	630	210	1YMX068210M0002	42
NALF 17-6K24 210R	17.5	630	210	1YMX068210M0004	42
NALF 24-4K235R	24	400	235	1YMX054074M0001	51
NALF 24-4K275R	24	400	275	1YMX054425M0001	51
NALF 24-6K235R	24	630	235	1YMX054075M0001	51
NALF 24-6K275R	24	630	275	1YMX054426M0001	51
NALF 36-6K360R	36	630	360	1YMX054322M0001	68
NALF 36-8K360R	36	800	360	1YMX054323M0001	68
NALF 36-10K360R	36	1000	360	1YMX054324M0001	68

—
Switch-disconnector with fuse base on opening side, operating mechanism K, without fuse tripping

Type	Rated voltage [kV]	Rated current [A]	Pole distance [mm]	Ordering number	Weight [kg]
NALF 12-4K150R	12	400	150	1YMX354070M0001	39
NALF 12-4K170R	12	400	170	1YMX368170M0001	39
NALF 12-4K210R	12	400	210	1YMX354925M0001	39
NALF 12-6K150R	12	630	150	1YMX354071M0001	39
NALF 12-6K170R	12	630	170	1YMX368170M0002	39
NALF 12-6K210R	12	630	210	1YMX354926M0001	39
NALF 17-4K210R	17.5	400	210	1YMX368210M0001	42
NALF 17-4K24 210R	17.5	400	210	1YMX368210M0003	42
NALF 17-6K210R	17.5	630	210	1YMX368210M0002	42
NALF 17-6K24 210R	17.5	630	210	1YMX368210M0004	42
NALF 24-4K235R	24	400	235	1YMX354074M0001	51
NALF 24-4K275R	24	400	275	1YMX354425M0001	51
NALF 24-6K235R	24	630	235	1YMX354075M0001	51
NALF 24-6K275R	24	630	275	1YMX354426M0001	51
NALF 36-6K360R	36	630	360	1YMX354322M0001	68
NALF 36-8K360R	36	800	360	1YMX354323M0001	68

—
19 NALF 12-6 12 kV switch-fuse combination with mechanism A

—
Switch-fuse combination with fuse base on pivot side, operating mechanism A, with fuse tripping

Type	Rated voltage [kV]	Rated current [A]	Pole distance [mm]	Ordering number	Weight [kg]
NALF 12-4A150R	12	400	150	1YMX054090M0001	41
NALF 12-4A170R	12	400	170	1YMX070170M0001	41
NALF 12-4A210R	12	400	210	1YMX054935M0001	41
NALF 12-6A150R	12	630	150	1YMX054091M0001	41
NALF 12-6A170R	12	630	170	1YMX070170M0002	41
NALF 12-6A210R	12	630	210	1YMX054936M0001	41
NALF 17-4A170R	17.5	400	170	1YMX054092M0001	44
NALF 17-4A24 170R	17.5	400	170	1YMX054092M0002	44
NALF 17-4A210R	17.5	400	210	1YMX070210M0001	44
NALF 17-4A24 210R	17.5	400	210	1YMX070210M0003	44
NALF 17-6A170R	17.5	630	170	1YMX054093M0001	44
NALF 17-6A24 170R	17.5	630	170	1YMX054093M0002	44
NALF 17-6A210R	17.5	630	210	1YMX070210M0002	44
NALF 17-6A24 210R	17.5	630	210	1YMX070210M0004	44
NALF 24-4A235R	24	400	235	1YMX054094M0001	53
NALF 24-4A275R	24	400	275	1YMX054435M0001	53
NALF 24-6A235R	24	630	235	1YMX054095M0001	53
NALF 24-6A275R	24	630	275	1YMX054436M0001	53
NALF 36-6A360R	36	630	360	1YMX054328M0001	70
NALF 36-8A360R	36	800	360	1YMX054329M0001	70
NALF 36-10A360R	36	1000	360	1YMX054330M0001	70

—
Switch-fuse combination with fuse base on opening side, operating mechanism A, with fuse tripping

Type	Rated voltage [kV]	Rated current [A]	Pole distance [mm]	Ordering number	Weight [kg]
NALF 12-4A150R	12	400	150	1YMX354090M0001	41
NALF 12-4A170R	12	400	170	1YMX370170M0001	41
NALF 12-4A210R	12	400	210	1YMX354935M0001	41
NALF 12-6A150R	12	630	150	1YMX354091M0001	41
NALF 12-6A170R	12	630	170	1YMX370170M0002	41
NALF 12-6A210R	12	630	210	1YMX354936M0001	41
NALF 17-4A210R	17.5	400	210	1YMX370210M0001	44
NALF 17-4A24 210R	17.5	400	210	1YMX370210M0003	44
NALF 17-6A210R	17.5	630	210	1YMX370210M0002	44
NALF 17-6A24 210R	17.5	630	210	1YMX370210M0004	44
NALF 24-4A235R	24	400	235	1YMX354094M0001	53
NALF 24-4A275R	24	400	275	1YMX354435M0001	53
NALF 24-6A235R	24	630	235	1YMX354095M0001	53
NALF 24-6A275R	24	630	275	1YMX354436M0001	53
NALF 36-6A360R	36	630	360	1YMX354328M0001	70
NALF 36-8A360R	36	800	360	1YMX354329M0001	70

—
Fuse base type F for spring mechanism type A with fuse tripping, mounted on pivot side

Type	Rated voltage [kV]	Rated current [A]	Pole distance [mm]	Ordering number	Weight [kg]
F 12	12	400/630	150	1YMX054195M0001	7
F 12	12	400/630	170	1YMX064195M0001	7
F 12	12	400/630	210	1YMX054976M0001	7
F 17	17	400/630	170	1YMX054196M0001	8
F 17	17	400/630	210	1YMX064196M0001	8
F 24	24	400/630	235	1YMX054197M0001	13
F 24	24	400/630	275	1YMX054476M0001	13
F 36	36	630/800	360	1YMX054335M0001	17

—
Fuse base type F for spring mechanism type A with fuse tripping, mounted on opening side

Type	Rated voltage [kV]	Rated current [A]	Pole distance [mm]	Ordering number	Weight [kg]
F 12	12	400/630	150	1YMX054200M0001	7
F 12	12	400/630	170	1YMX064200M0001	7
F 12	12	400/630	210	1YMX054978M0001	7
F 17	17	400/630	210	1YMX064201M0001	8
F 24	24	400/630	235	1YMX054202M0001	13
F 24	24	400/630	275	1YMX054478M0001	13

—

Fuse base type F for spring mechanism type K/A without fuse tripping, mounted on opening side

Type	Rated voltage [kV]	Rated current [A]	Pole distance [mm]	Ordering number	Weight [kg]
F 12	12	400/630	150	1YMX054190M0001	7
F 12	12	400/630	170	1YMX064190M0001	7
F 12	12	400/630	210	1YMX054961M0001	7
F 17	17.5	400/630	210	1YMX064191M0001	8
F 24	24	400/630	235	1YMX054193M0001	13
F 24	24	400/630	275	1YMX054461M0001	13
F 36	36	630/800	360	1YMX054337M0001	17

—

Earthing switch type E for NAL switch-disconnector without mechanical interlocking

Type	Rated voltage [kV]	Rated current [A]	Pole distance [mm]	Ordering number	Weight [kg]
E 12	12	400/630	150	1YMX054235M0001	7
E 12	12	400/630	170	1YMX064235M0001	7
E 12	12	400/630	210	1YMX054983M0001	7
E 12	12	1250	150	1YMX054214M0001	7
E 12	12	1250	170	1YMX064235M0002	7
E 12	12	1250	210	1YMX054989M0001	7
E 17	17.5	400/630	170	1YMX054236M0001	8
E 17	17.5	400/630	210	1YMX064236M0001	8
E 17	17.5	1250	170	1YMX054218M0001	8
E 17	17.5	1250	210	1YMX064236M0002	8
E 24	24	400/630	235	1YMX054237M0001	9
E 24	24	400/630	275	1YMX054483M0001	9
E 24	24	1250	235	1YMX054219M0001	9
E 24	24	1250	275	1YMX054489M0001	9

—

Earthing switch type E for NAL switch-disconnector without mechanical interlocking, mounted on fuse base

Type	Rated voltage [kV]	Rated current [A]	Pole distance [mm]	Ordering number	Weight [kg]
E 12	12	400/630	150	1YMX054225M0001	7
E 12	12	400/630	170	1YMX064225M0001	7
E 12	12	400/630	210	1YMX054988M0001	7
E 17	17.5	400/630	170	1YMX054226M0001	8
E 17	17.5	400/630	210	1YMX064226M0001	8
E 24	24	400/630	235	1YMX054227M0001	9
E 24	24	400/630	275	1YMX054488M0001	9

—
Earthing switch type EB freestanding

Type	Rated voltage [kV]	Rated current [A]	Pole distance [mm]	Ordering number	Weight [kg]
EB 12	12	1250	150	1YMX054270M0001	17.5
EB 12	12	1250	170	1YMX064270M0001	17.5
EB 12	12	1250	210	1YMX054271M0001	17.5
EB 17	17.5	1250	170	1YMX054272M0001	19
EB 17	17.5	1250	210	1YMX064272M0001	19
EB 24	24	1250	235	1YMX054273M0001	24
EB 24	24	1250	275	1YMX054274M0001	24
EB 36	36	800	360	1YMX054288M0001	30
EB 36 on pivot side NAL	36	630/800	360	1YMX344033M0001	30
EB 36 on opening side NAL	36	630/800	360	1YMX344034M0001	30
EB 36 on pivot side NALF	36	630/800	360	1YMX344035M0001	30
EB 36 on opening side NALF	36	630/800	360	1YMX344036M0001	30

—
Hand operating mechanism type HE with accessories

Description/Type	Ordering number	Weight [kg]
Front bearing for HE, with cardanic joint (Fig. 16 a)	1YMX053233M0001	1.4
Front bearing for HE, without cardanic joint	1YMX053233M0002	0.6
Front bearing for HE for motor operation	1YMX042249M0004	1.8
Bevel gear for HE (Fig. 16 b)	1YMX053362M0002	2.1
Operating handle for HE	1YMX053235M0001	2.1
Operating handle for HE armoured	1YMX053235M0004	2.1
Front bearing for HE, with blocking coil, 230 VAC (Fig. 16 c)	1YMX053393M0001	2.1
Front bearing for HE, with blocking coil, 110 VAC	1YMX053394M0001	2.1
Front bearing for HE, with blocking coil, 220 V DC	1YMX053395M0001	2.1
Front bearing for HE, with blocking coil, 110 V DC	1YMX053396M0001	2.1
Front bearing for HE, with blocking coil, 48 V DC	1YMX053397M0001	2.1
Front bearing for HE, with blocking coil, 24 V DC	1YMX053398M0001	2.1
Spare colis for blocking coil, 230 VAC	1YMX018958M0015	0.8
Spare colis for blocking coil, 110 VAC	1YMX018958M0014	0.8
Spare colis for blocking coil, 220 V DC	1YMX018958M0006	0.8
Spare colis for blocking coil, 110 V DC	1YMX018958M0007	0.8
Spare colis for blocking coil, 48 V DC	1YMX018958M0016	0.8
Spare colis for blocking coil, 24 V DC	1YMX018958M0017	0.8
Shaft extension for left-hand side operation		
• for pole distance 150 mm	1YMX054357M0001	1.9
• for pole distance 210 mm	1YMX054353M0001	2.3
• for pole distance 170 mm (12 kV)	1YMX054358M0002	2.1
• for pole distance 170 mm (17 kV and 24 kV)	1YMX054358M0001	2.1
• for pole distance 235 mm	1YMX054359M0001	2.6
• for pole distance 275 mm	1YMX054355M0001	3.1
• for pole distance 360 mm	1YMX343226M0004	4.0
Connection kit for shaft extension assembling	1YMX000054M0001	0.1
Connecting rod 3/4” L= 490 mm	1YMX053346M0008	0.8
Connecting rod 3/4” L= 550 mm	1YMX053346M0009	0.9
Connecting rod 3/4” L= 570 mm	1YMX053346M0010	1.0
Connecting rod 3/4” L= 1300 mm (Fig. 16 d)	1YMX053346M0002	1.9
Connecting rod 3/4” L= 2000 mm	1YMX053347M0001	2.9

Description/Type	Ordering number	Weight [kg]
Connecting rod 3/4” L= 1300 mm isolated	1YMX000012M0001	2.1
Connecting rod 3/4” L= 2000 mm isolated	1YMX000012M0002	3.1
Connecting rod 3/4” L= 1300 mm isolated strength[1)]	1YMX000012M0003	2.9
Connecting rod 3/4” L= 2000 mm isolated strength[1)]	1YMX000012M0004	4.2
Connecting rod 3/4” L= 668 mm isolated CZ[2)]	1YMX000012M0005	1.2
Connecting rod 3/4” L= 738 mm isolated CZ[2)]	1YMX000012M0006	1.3
Connecting rod 3/4” L= 1300 mm isolated strength CZ[1) 2)]	1YMX000012M0007	2.9
Connecting rod 3/4” L= 2000 mm isolated strength CZ[1)2)]	1YMX000012M0008	4.2
Connecting rod 3/4” L= 1300 mm strength[1)]	1YMX000004M0003	2.7
Connecting rod 3/4” L= 2000 mm strength[1)]	1YMX000004M0004	4.0
Connecting rod 3/4” L= 1300 mm strength CZ[1) 2)]	1YMX000004M0007	2.7
Connecting rod 3/4” L= 2000 mm strength CZ[1) 2)]	1YMX000004M0008	4.0
Insulated opening levers for switch operation (Crank arm)	1YMX053225M0001	1.7
Shaft extension 470 mm	1YMX053348M0001	1.7
Shaft extension 380 mm	1YMX053349M0001	1.4
Joint link for shaft extension	1YMX053350M0001	0.2
Support bearing		
• for NAL/NALF 12	1YMX053351M0001	1.8
• for NAL/NALF 17/24	1YMX053352M0001	1.9
• for NAL/NALF 36	1YMX241415M0001	1.9
• for NAL 12 with E 12	1YMX053353M0001	2.2
• for NAL 17/24 with E 17/24	1YMX053354M0001	2.8
• for F 12 with E 12	1YMX053355M0001	1.3
• for F 17/24 with E 17/24	1YMX053356M0001	1.4
Components for transmission 90°[3)]:		
• bevel gear (Fig. 16b)	1YMX053393M0002	2.1
• bevel gear support	1YMX343036M0001	1.2
• rod connector	1YMX000053M0001	0.7
Transmission 90° complete	1YMX000129M0006	4.0
Test fuse, adjustable length 3.6/40 kV with striker pin	1YMX300062M0001	1.2

[1)] Recommended for motor drive UEMC40A/UEMC41 and switch-disconnector type NAL/NALF 24 – 36 kV
[2)] Zinc plated
[3)] For these items use strength connecting rod only

—

Mechanical interlocking for earthing switch*) (Fig. 15)

Description/Type	Ordering number	Weight [kg]
• on NAL 12	1YMX054275M0001	2.5
• on NAL 17/24	1YMX054276M0001	3.1
• on NALF 12. Fuse e = 292 mm	1YMX054277M0001	5.7
• on NALF 12. Fuse e = 192 mm	1YMX054278M0001	5.0
• on NALF 12. Fuse e = 442 mm	1YMX054279M0001	6.4
• on NALF 12. Fuse e = 464 mm	1YMX054286M0001	6.4
• on NALF 17. Fuse e = 292 mm	1YMX054280M0001	6.3
• on NALF 17. Fuse e = 442 mm	1YMX054281M0001	7.0
• on NALF 24. Fuse e = 442 mm (earthing switch from switch side)	1YMX054282M0001	6.5
• on NALF 24. Fuse e = 537 mm	1YMX054283M0001	7.3
• on NAL 36 EB on pivot side	1YMX343986M0002	5.4
• on NAL 36 EB on opening side	1YMX343986M0001	3.3
• on NALF 36 EB on pivot side	1YMX343986M0003	9.4
• on NALF 36 EB on opening side	1YMX343986M0004	7.6

*) Normally, interlocking is mounted on the left-hand side of the switch and therefore a shaft for left-hand operation is needed.

—
20 Auxiliary switch can be mounted on all switch disconnectors, max. 8NO and 8NC and on all earthing switches, max. 4NO + 4NC + connection kit for assembling.

—
21 Shunt trip coil can be mounted on all A-mechanisms. This coil is available for the following voltages: 24, 48, 110, 220 V DC and 110, 220 V AC. It shall always be connected in series with an auxiliary switch, which disconnects the shunt trip coil when the switch is open.

—
20

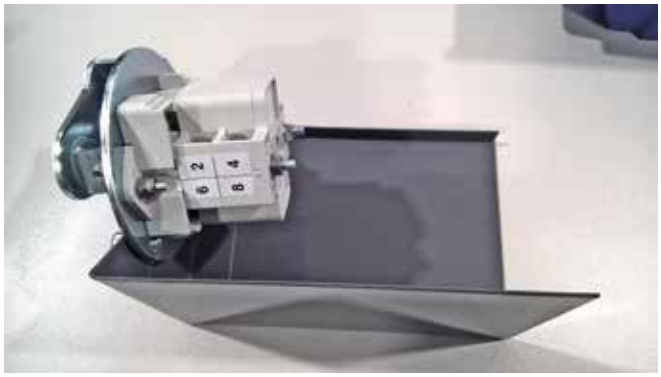

—
Aux. switches for switch-disconnectors and earthing switch (Fig. 20)

Description/Type	Ordering number	Weight [kg]
Auxiliary switch:		
• 2NO + 2NC for NAL(F) 12-24	1YMX054713M0001	0.9
• 4NO + 4NC for NAL(F) 12-24	1YMX054714M0002	1.0
• 8NO + 8NC for NAL(F) 12-24	1YMX054715M0001	1.1
• 2NO + 2NC for E/EB 12-24	1YMX054716M0001	0.9
• 2NO + 2NC for E/EB 36	1YMX054716M0002	0.9
• 4NO + 4NC for E/EB 12-24	1YMX054717M0001	1.0
• 4NO + 4NC for E/EB 36	1YMX054717M0002	1.0
• 2NO + 2NC for NAL(F) 36	1YMX240807M0005	0.9
• 4NO + 4NC for NAL(F) 36	1YMX240807M0006	1.0
• 8NO + 8NC for NAL(F) 36	1YMX054715M0001	1.1
Fixing materials for NAL(F) 36	1YMX240807M0004	0.1
Auxiliary contact for fuse interruption	1YMX053390M0001	0.1

—
21

—
Shunt trip for A mechanism*) (including fixing parts) (Fig. 21)

Description/Type	Ordering number	Weight [kg]
Coil 220 VAC without auxiliary switch	1YMX054740M0001	0.6
Coil 110 VAC without auxiliary switch	1YMX054741M0001	0.6
Coil 125 VAC without auxiliary switch	1YMX054741M0002	0.6
Coil 220 VDC without auxiliary switch	1YMX054742M0001	0.6
Coil 110 VDC without auxiliary switch	1YMX054743M0001	0.6
Coil 125 VDC without auxiliary switch	1YMX054743M0002	0.6
Coil 48 VDC without auxiliary switch	1YMX054744M0001	0.6
Coil 24 VDC without auxiliary switch	1YMX054745M0001	0.6

*) In connection with shunt trip, auxiliary switch that breaks shunt trip circuit, must be used.

3. Motor operating device

UEMC 41 motor operating device

—
22 UEMC 41 drive design
1 – Gearbox,
2 – Motor,
3 – Drive cover,
4 – Microswitch (service lock),
5 – Shaft output for manual operating,
6 – Selector (for selecting drive mode – see more in point "Mechanical selector description"),
7 – Microswitch (for setting angle of rotation),
8 – Coupling bush,
9 – Locking coil

—
22

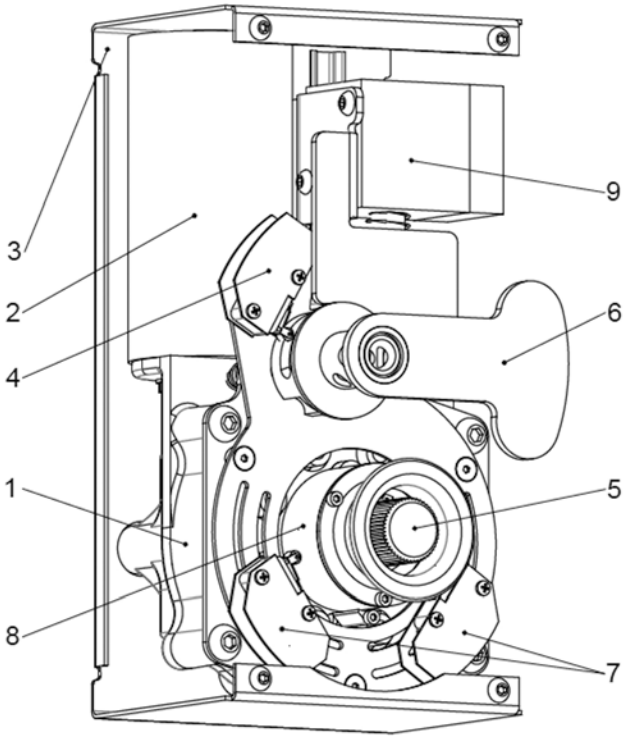

—
UEMC 41 rated data

Characteristic		Value
Mechanical and electrical locking	-	Yes
Nominal torque	Nm	150
Max. torque	Nm	300
Max external dimensions (without control cabinet) HxWxD	mm	415x135x140
Auto blocking	-	Yes
Rotation angle adjustment	-	Yes
Default rotation angle setting	°	150
Rotation angle	°	from 0 to 300
Max. mechanical endurance	Cycles	5000
Supplying voltages	V	24VDC, 48VDC, 110/125 AC/DC, 220/230 AC/DC
Working temperature	°C	-40 +75
Weight (depends on versions)	kg	8.2-11

The complete motor operating device NM 24...220

—
23 NM drive with

Description
The motor operating device can be mounted directly on the switch disconnector or on the wall of the disconnector cubicle.
The device operates either K or A mechanism. After each motor operation the device is mechanically disconnected and makes it possible to manually operate the disconnector

Function
The electric motor drives a gearbox that transfers power to the operating gearwheel.
The gearwheel tensions, through the disconnector shaft, the spring in the mechanism on the disconnector with a rotating angle of 150°. The gearwheel starts from position S1 and moves to the end position S2 or end position S3 for charging the spring respectively way and then goes back to position S1.

Control Unit
The control unit consists of required connection relays and terminals. The unit is fitted with automatic fuses. The unit can be placed inside the switch disconnector cubicle or in a separate operating box.
The unit is connected to the motor operating device with a plug-in connection.

—
23

—
Technical data

Type		NM24	NM48	NM60	NM110/125	NM220
Power consumption	W	70	70	70	70	70
Operating voltage. AC	V	17...26	34...52	42...66	77...137	154...242
Operating voltage. DC	V	22...28	43...57	54...72	99...150	198...264
Nominal current during operation	A	3	3	0.8	0.8	0.4
Maximum current during operation	A	6	6	4	4	1.2
Operating time	sec	~4	~4	~8	~8	~4
Signalling time	sec	0.5...2.0	0.5...2.0	1.0...4.0	0.5...2.0	0.5...2.0

Operating temperature	°C	-40...+50
Weight	kg	6

—
Space bracket selection table

Index	Description	A-mech							
		NAL/F 12		NAL/F 17.5		NAL/F 24		NAL/F 36	
		L	R	L	R	L	R	L	R
1YMX000044M0002	Space bracket 55 mm	X		X					
1YMX000044M0004	Space bracket 105 mm					X			
1YMX000044M0005	Space bracket 39 mm		X		X		X		X
1YMX000044M0001+ 1YMX000044M0004	Space bracket 39+105 mm							X	

Index	Description	K-mech							
		NAL/F 12		NAL/F 17.5		NAL/F 24		NAL/F 36	
		L	R	L	R	L	R	L	R
1YMX000044M0001	Space bracket 39 mm		X		X		X		
1YMX000044M0002	Space bracket 55 mm	X		X					
1YMX000044M0004	Space bracket 105 mm					X			X
1YMX000044M0001+ 1YMX000044M0004	Space bracket 39+105 mm							X	

4. Dimensional drawings

—
24 NAL12, 17.5 and 24 kV with mechansim

—
25 NAL – H (12, 17.5 and 24 kV) with mechansim

Switch-disconnector type NAL12, 17.5 and 24 kV with mechansim

—
24

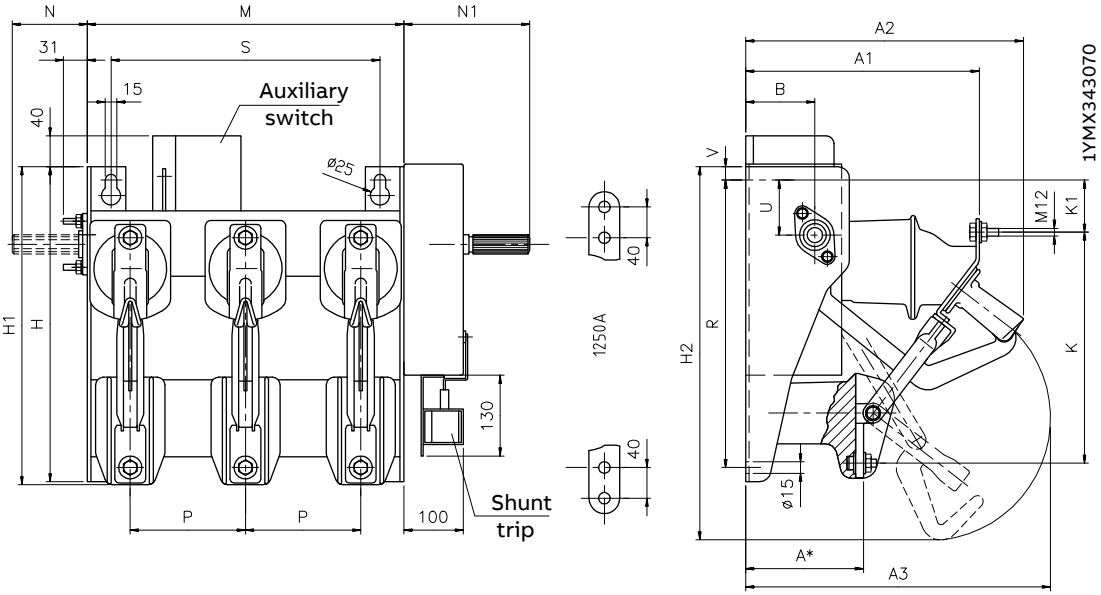

Switch-disconnector type NAL - H (12, 17.5 and 24 kV) with mechansim

—
25

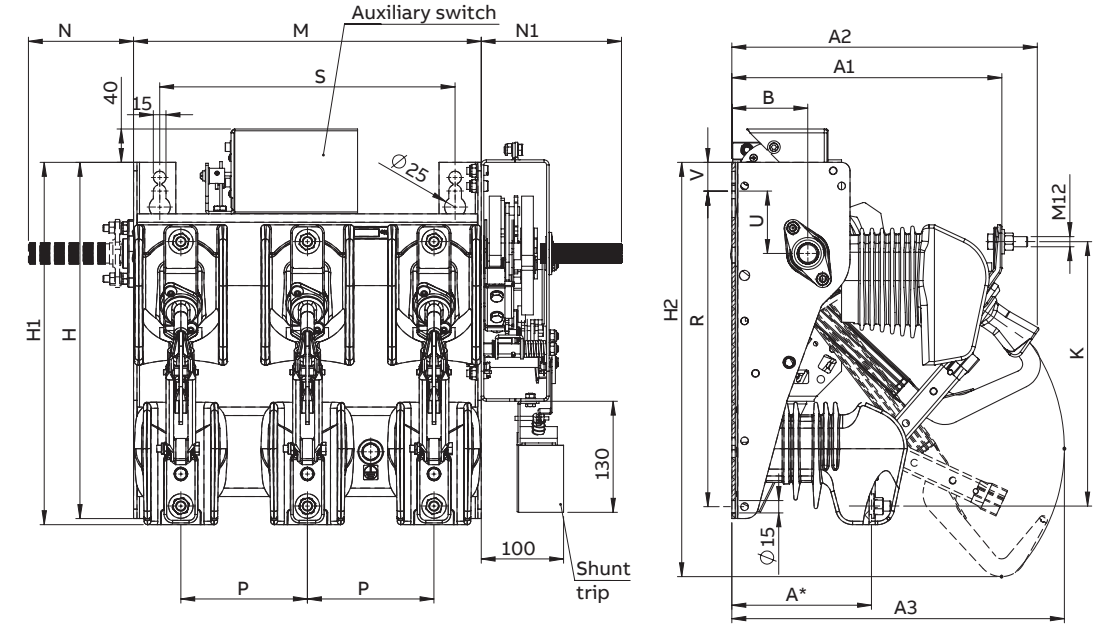

Type		A	A1	A2	A3	B	H	H1	H2	K	K1	M	N	N1	P	R	S	U	V
NAL 12-A/K	P=150	166	320	362	394	90	422	428	510	310	63	412	122	164	150	375	350	75	33
NAL 12-A/K	P=170	166	320	362	394	90	422	428	510	310	63	452	122	164	170	375	390	75	33
NAL 12-A/K	P=210	166	320	362	394	90	422	428	510	310	63	532	122	164	210	375	470	75	33
NAL 17.5-A/K	P=170	225	375	418	511	98	534	577	600	441	87	452	122	164	170	500	395	90	18
NAL 17.5-A/K	P=210	225	375	418	511	98	534	577	600	441	87	532	122	164	210	500	475	90	18
NAL 24-A/K	P=235	225	375	418	511	98	534	577	600	441	87	582	186	202	235	500	525	90	18
NAL 24-A/K	P=275	225	375	418	511	98	534	577	600	441	87	662	186	202	275	500	605	90	18

*1250 A: dimension A +2 mm

—
26 NALF 12 kV with mechanism

—
27 NALF – H
12 kV with mechanism

NALF 12 kV with mechanism

—
26

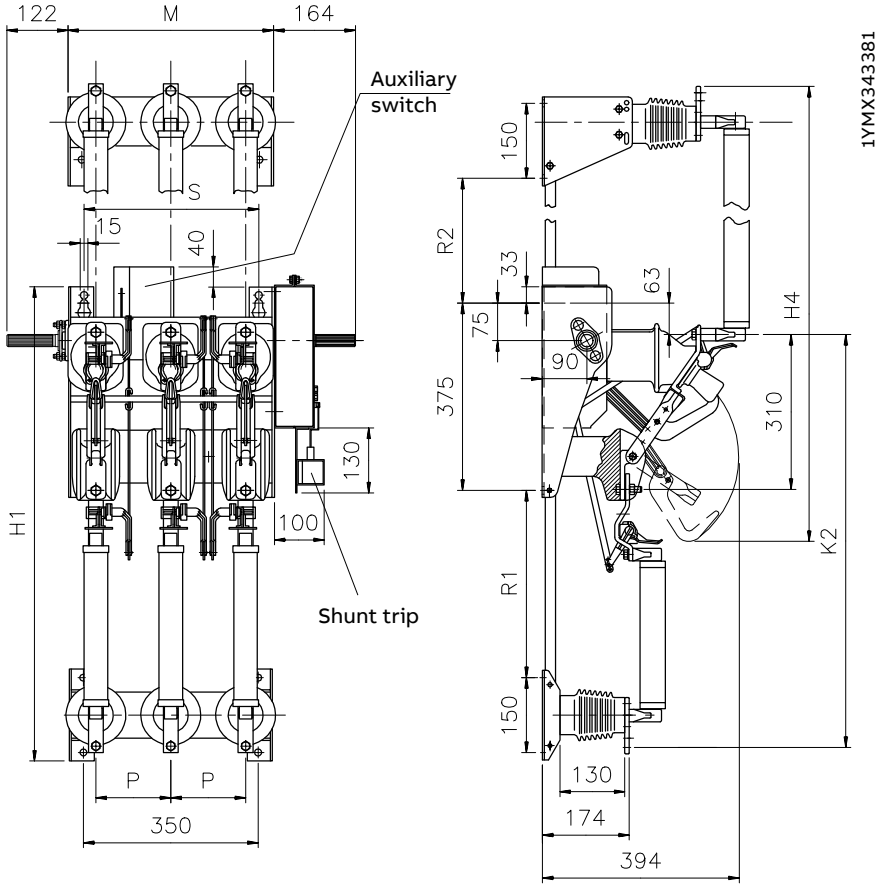

Fuses							
kV	length	H1	H4	K2	K4	R1	R2
3.6/7.2	192	848	710	722	598	275	50
	292	948	810	822	698	375	150
12	292						
	442	1098	960	972	848	525	300

Type		M	S
NALF 12	P=150	412	350
NALF 12	P=170	452	390
NALF 12	P=210	532	470

Switch-fuse combination type NALF – H 12 kV with mechanism

—
27

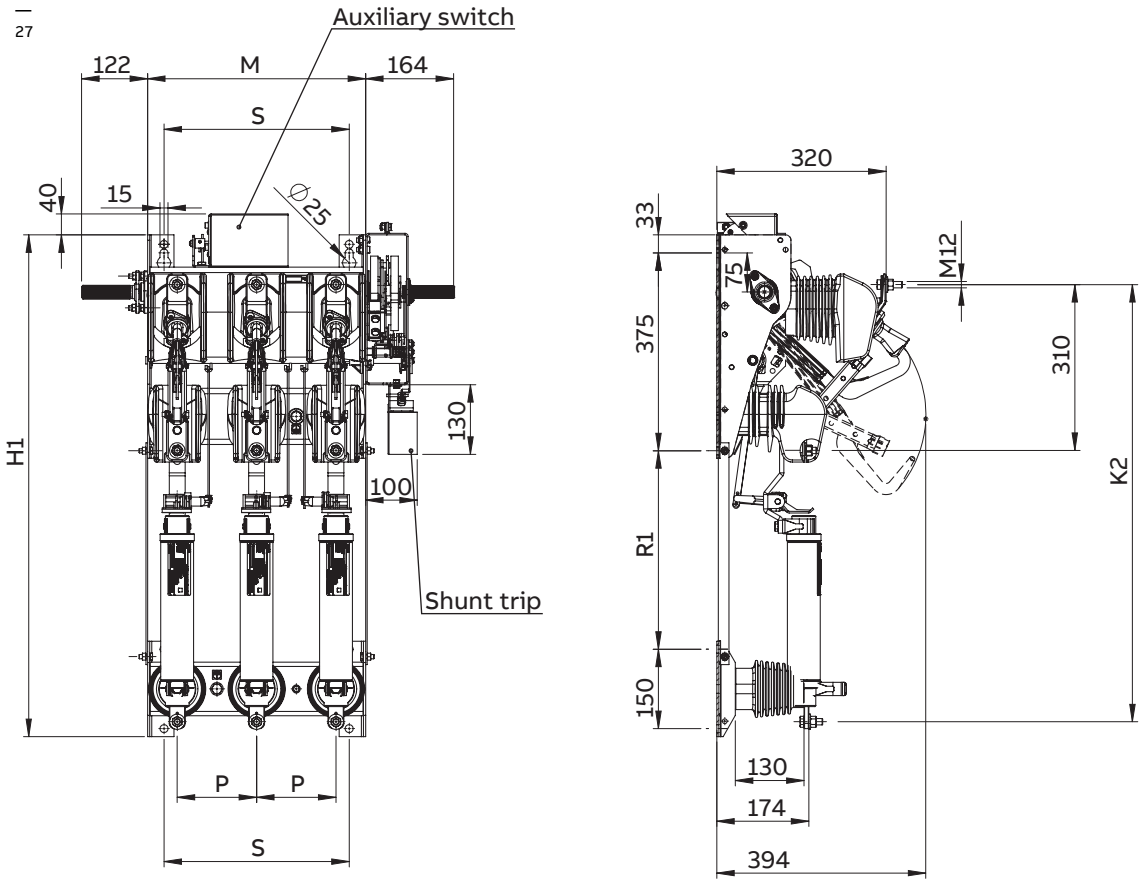

—
28 NALF 17.5 kV with mechanism

—
29a NALF – 24 kV with mechanism

Switch-fuse combination type NALF 17.5 kV with mechanism

—
28

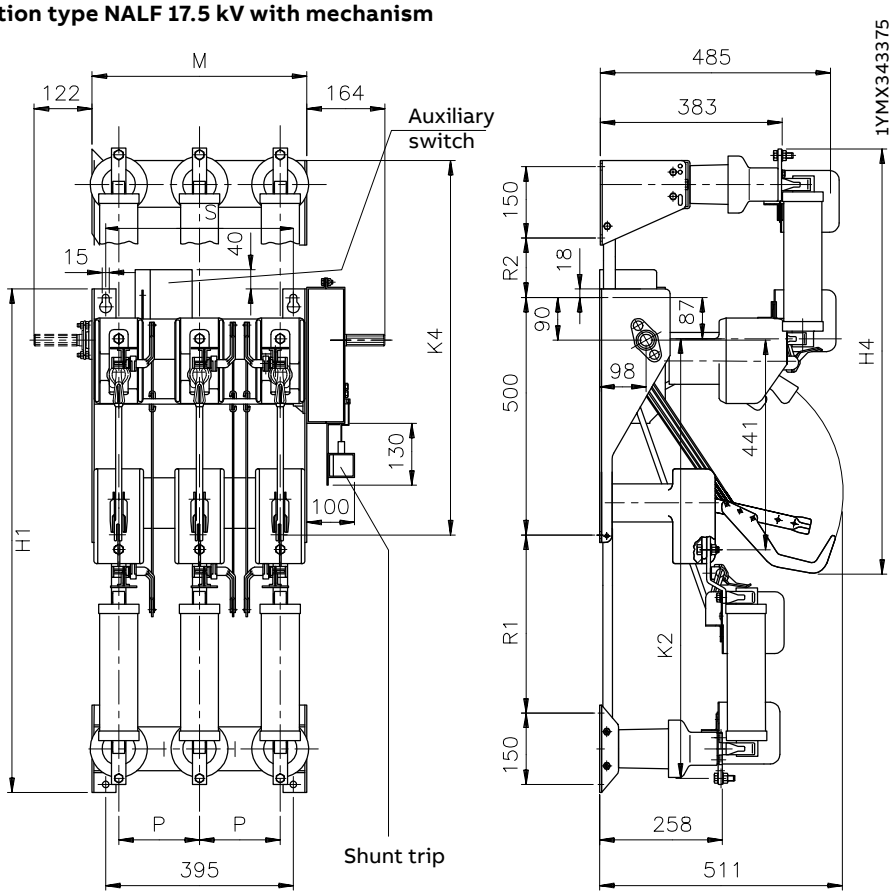

Fuses		H1	H4	K2	K4	R1	R2
kV	length						
17.5	292	1060	895	925	828	375	125
	442	1210	1045	1075	978	525	275

Type		M	S
NALF 17[1)]	P=170	452	395
NALF 17	P=210	532	470

1) Available only for pivot side

Switch-fuse combination type NALF – 24 kV with mechanism

—
29a

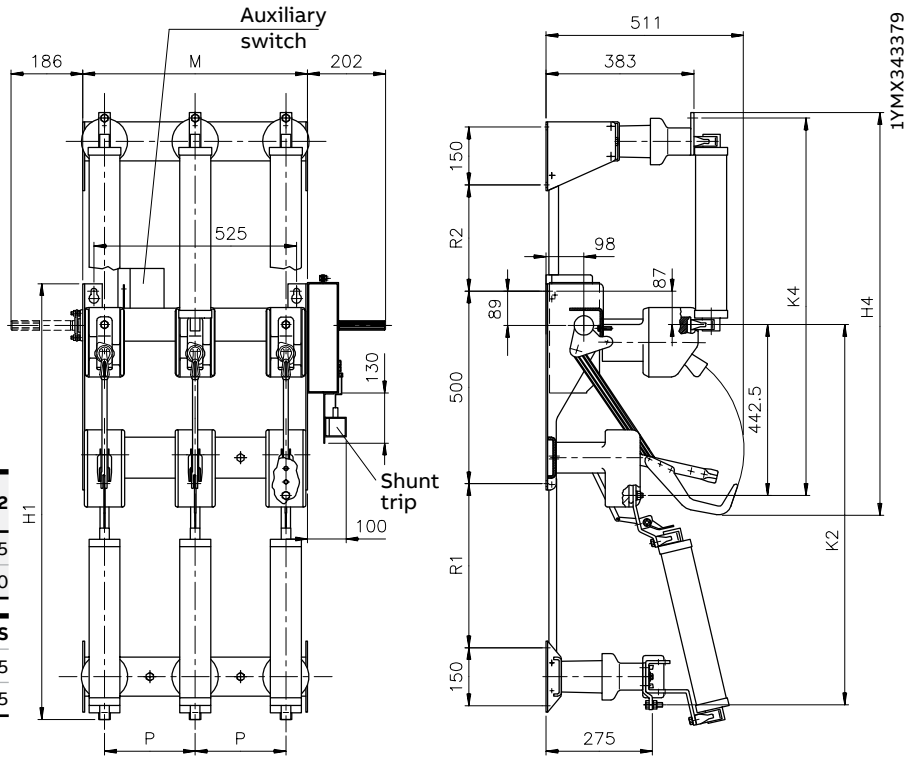

Fuses		H1	H4	K2	K4	R1	R2
kV	length						
24	442	1084	1045	986	978	425	275
	537	1284	1140	1090	1073	525	370

Type		M	S
NALF 24	P=235	582	525
NALF 24	P=275	662	605

—
29b NALF – H 24 kV with mechanism

—
30
a) Earthing switch with making capacity type E 12 mounted on NAL12
b) Earthing switch with making capacity type E 12 mounted on fuse base F 12

Switch-fuse combination type NALF – H 24 kV with mechanism

—
29b

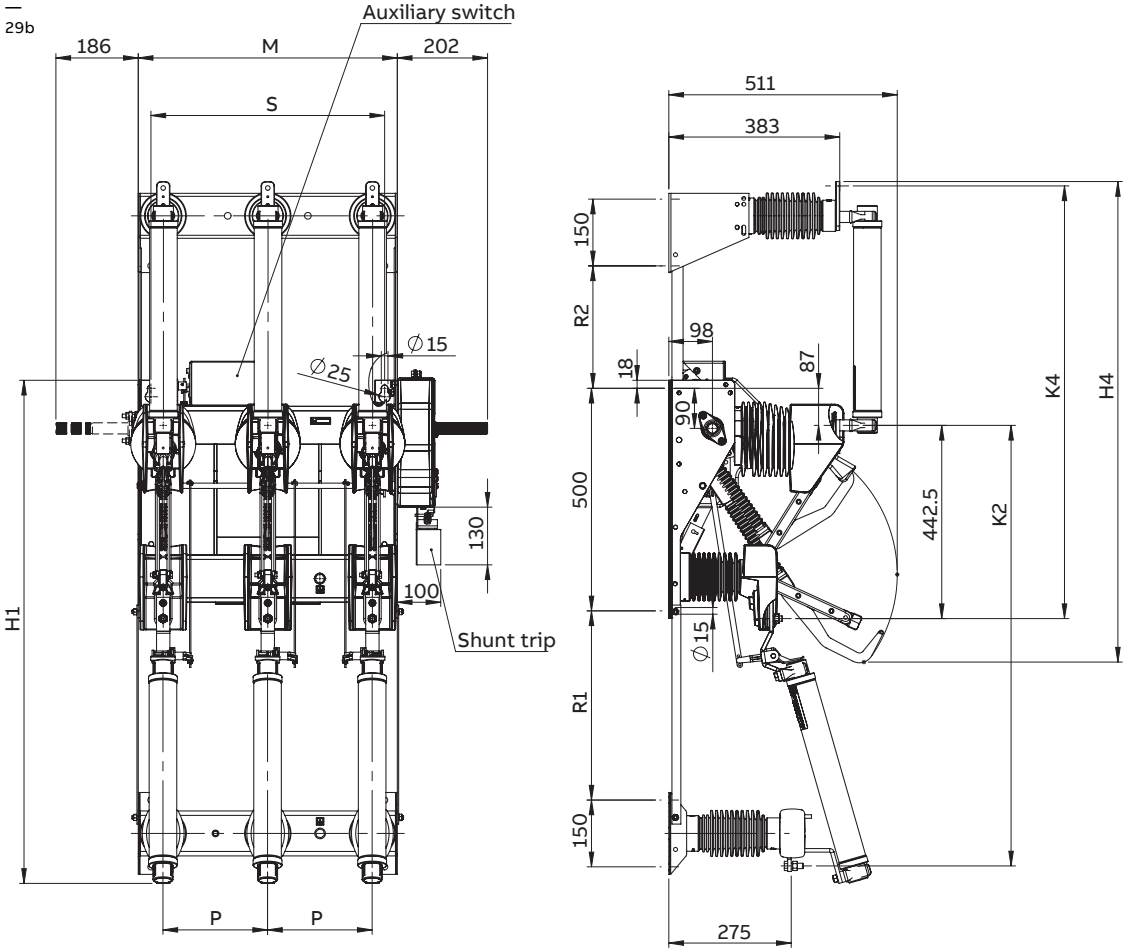

Earthing switch with making capacity type E12

—
30

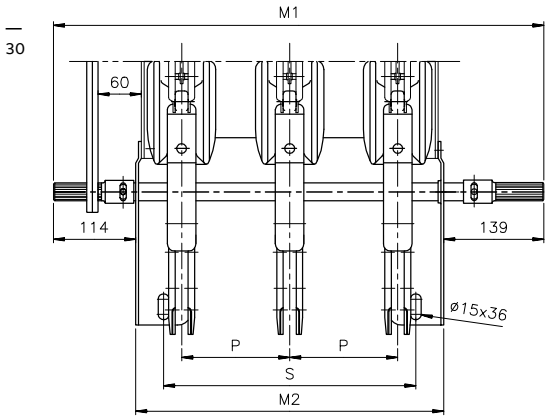

1YMX343600

Type		M1	M2	S
E12	P=150	681	428	350
E12	P=170	721	468	390
E12	P=210	801	548	470

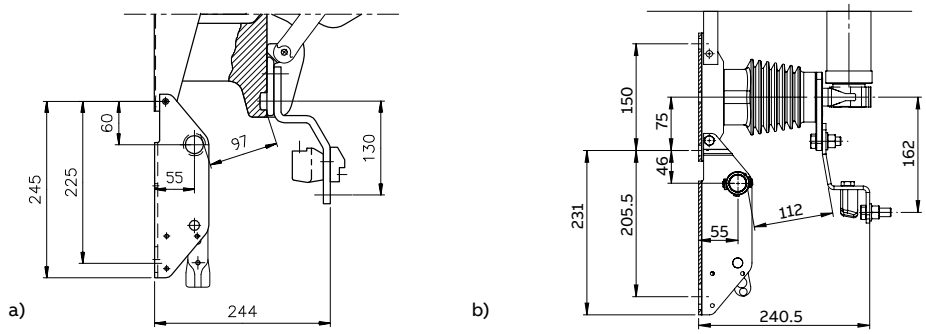

—
31
a) Earthing switch with making type E17.5 mounted on NAL 17.5
b) Earthing switch with making type E17.5 mounted on fuse base F 17.5

Earthing switch with making capacity type E17.5

—
31

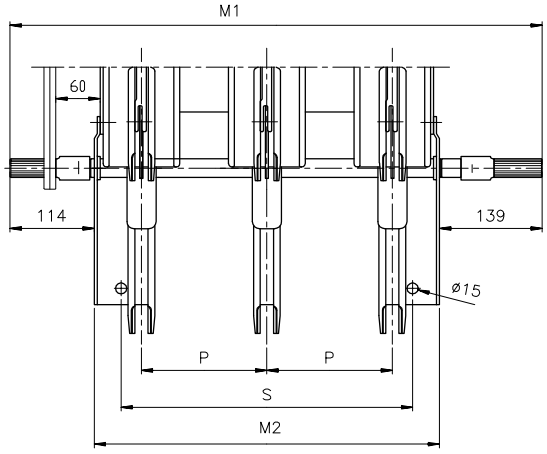

1YMX343601

E 17.5	M1	M2	S
P=170	721	468	395
P=210	801	548	475

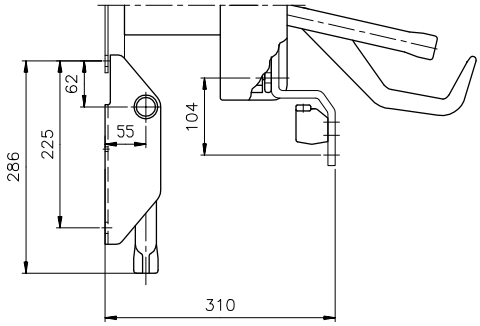

a)

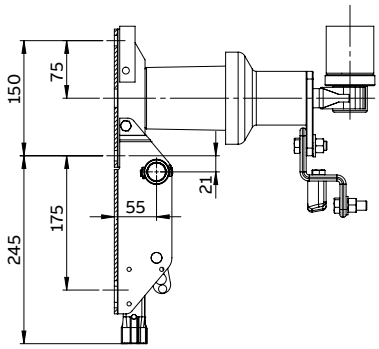

b)

—
32
a) Earthing switch with making capacity type E 24 mounted on NAL 24
b) Earthing switch with making capacity type E 24 mounted on fuse base F 24

—
33
NAL – H 24kV with earthing switch

Earthing switch with making capacity type E24

—
32

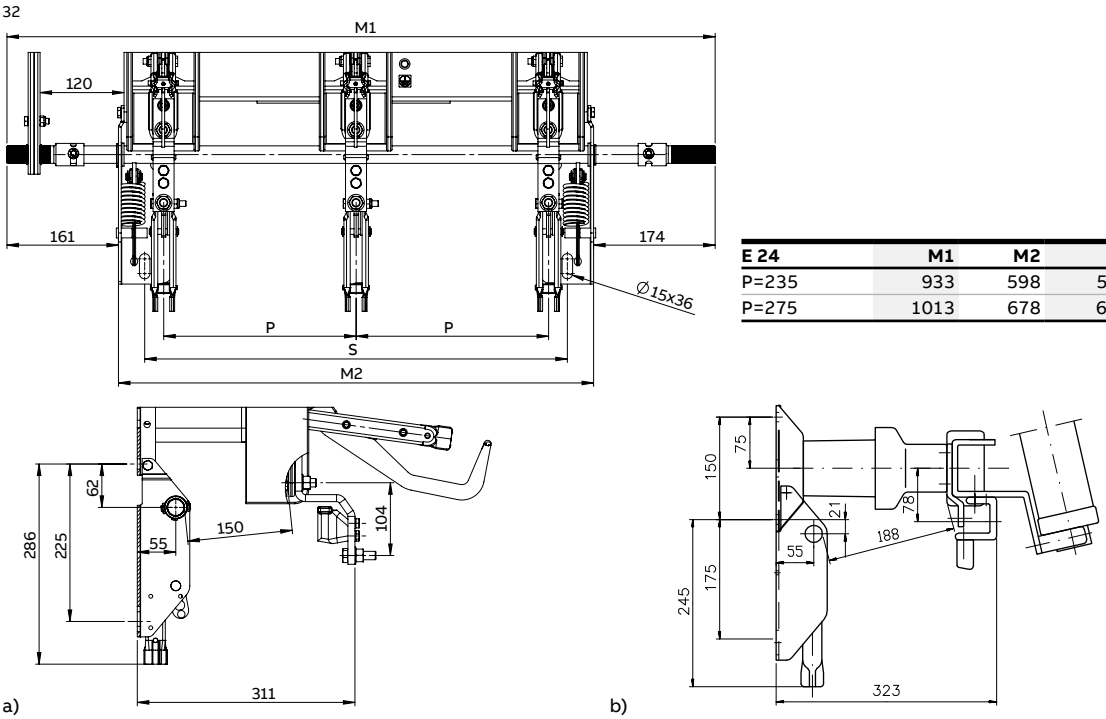

E 24	M1	M2	S
P=235	933	598	525
P=275	1013	678	605

Earthing switch with making capacity type E24

—
33

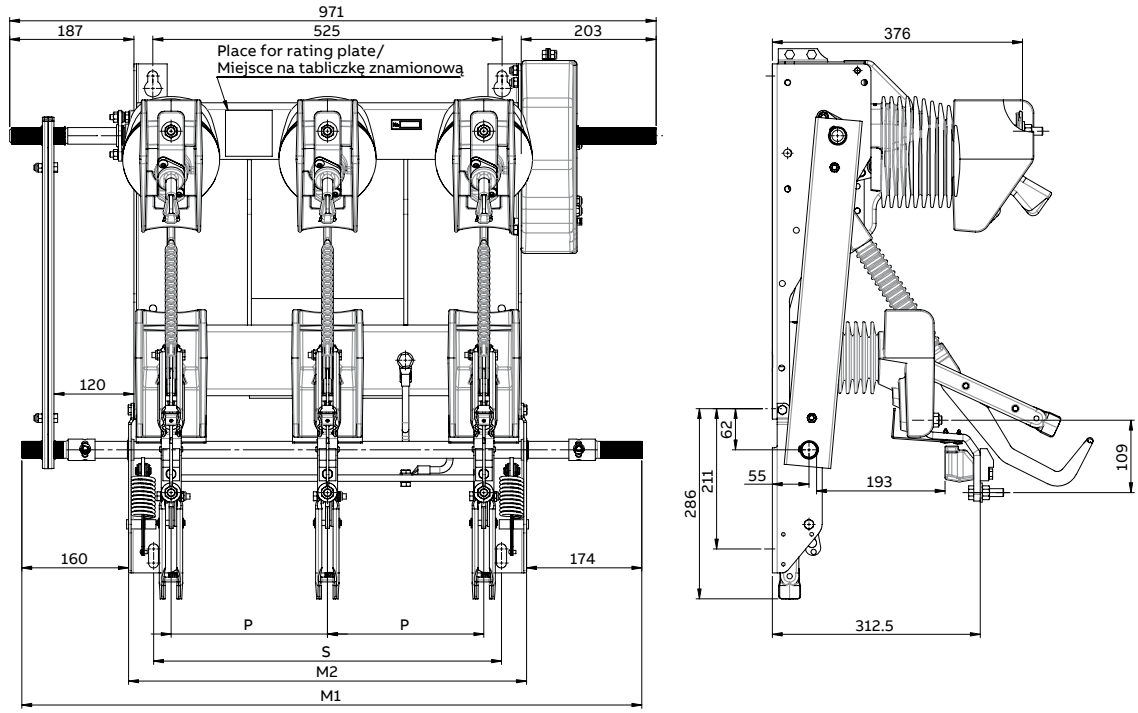

Screw	Torque
M8	25 Nm ± 10%
M12	40 Nm ± 10%

—
34 Earthing switch EB-H 24 kV mounted on the fuse base

—
35 Earthing switch E 12, 17.5, 24 – dimensional drawing

Earthing switch with making capacity type EB-H 24 kV mounted on the fuse base

—
34

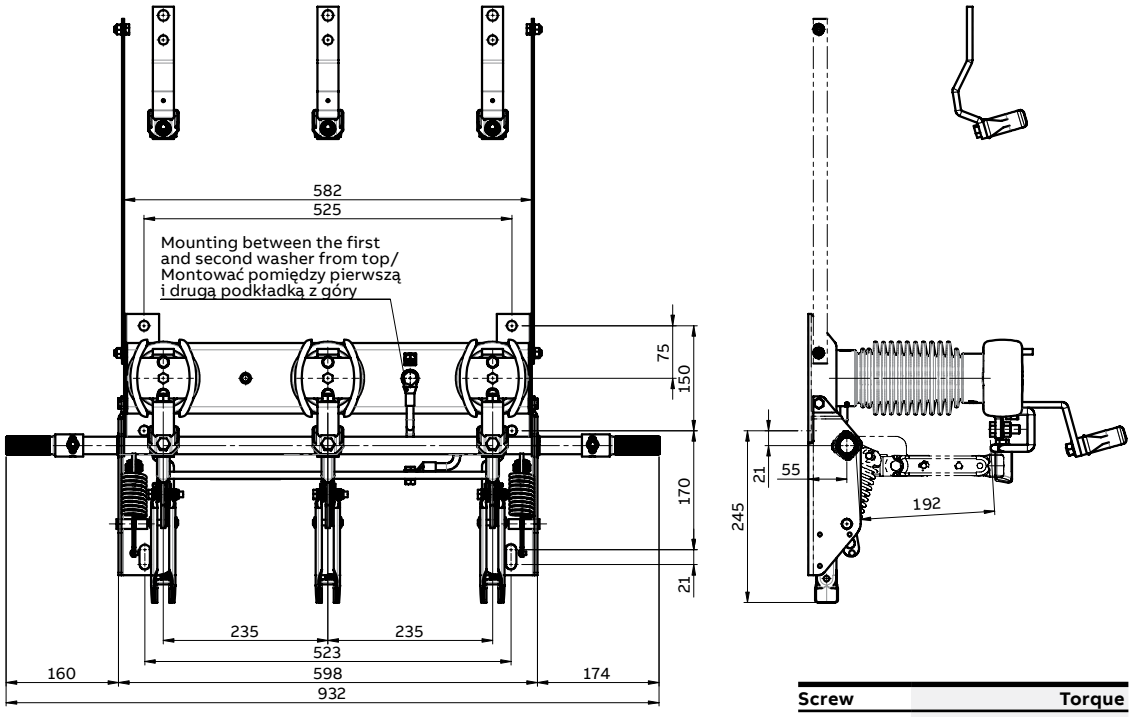

Screw	Torque
M8	25 Nm ± 10%
M10	32 Nm ± 10%
M12	40 Nm ± 10%

Earthing switch with making capacity type E 12, E 17.5 and E 24

—
35

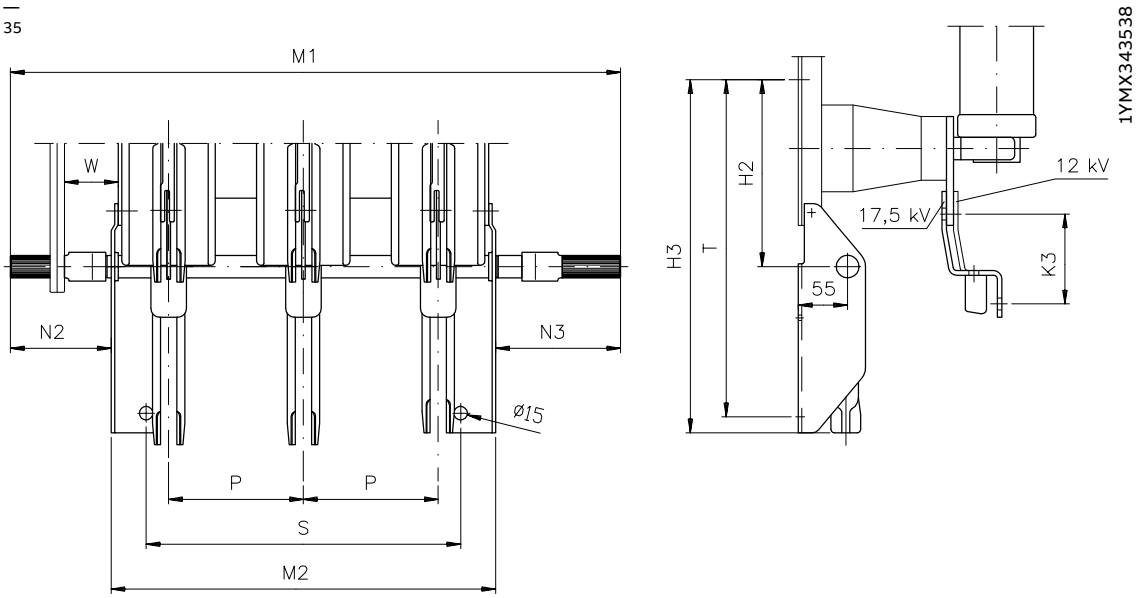

Type		H2	H3	K3	M1	M2	N2	N3	P	S	I	W
E12	P=150	208	393	100	681	428	112	139	150	350	375	60
E12	P=170	208	393	100	721	468	112	139	170	390	375	60
E12	P=210	208	393	100	801	548	112	139	210	470	375	60
E17.5	P=170	208	432	100	721	468	112	139	170	395	375	60
E17.5	P=210	208	432	100	801	548	112	139	210	395	375	60
E24	P=235	351	575	100	933	598	161	174	235	525	500	120
E24	P=275	351	575	100	1013	678	161	174	275	605	500	120

—
36 Other measurements see figure 1YMX343538 above

—
37 NALF 12 150 RE dimensional drawing

Separately mounted earthing switch with making capacity type EB

—
36

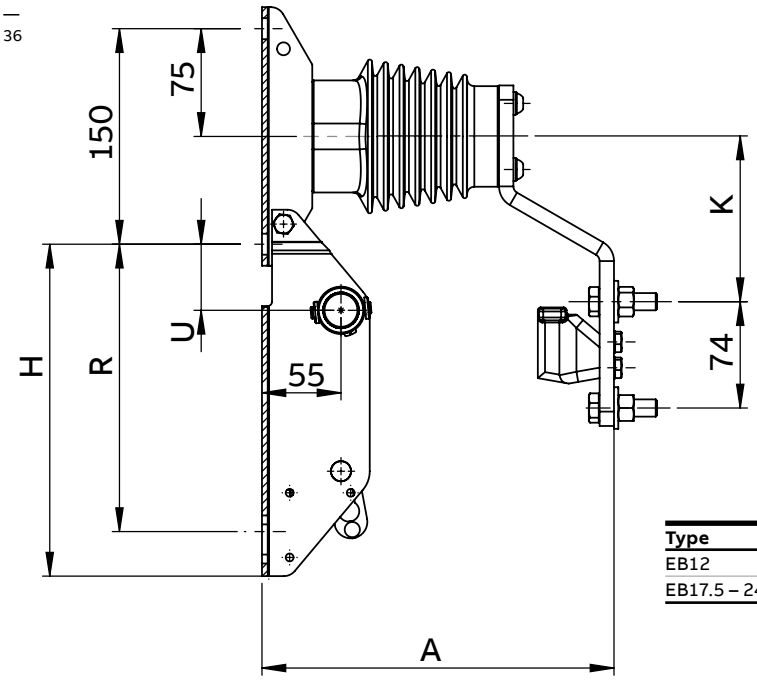

1YMX343611

Type	A	H	K	R	U
EB12	245	231	115	200	46
EB17.5 – 24	310	245	90	175	21

Switch-fuse combination with earthing switch NALF 12 150 RE – example of arrangement

—
37

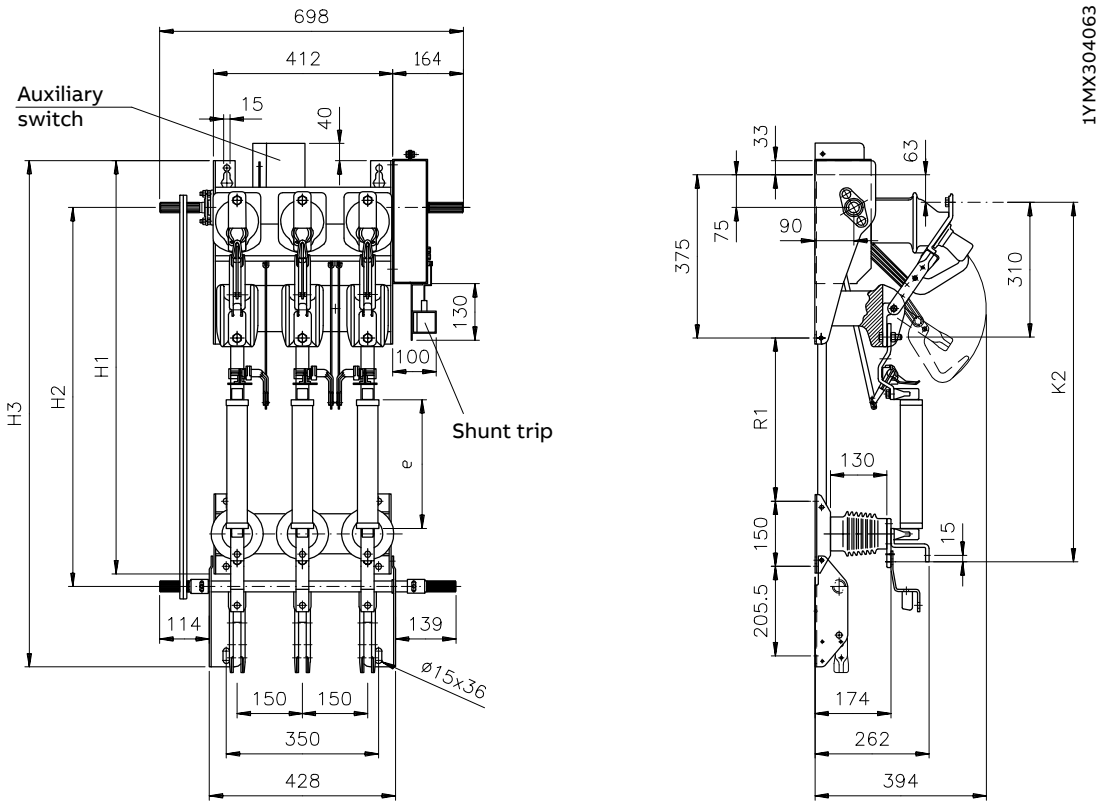

1YMX304063

Fuses						
kV	e	H1	H2	H3	K2	R1
7.2	192	848	772	1063	722	275
	292	948	872	1163	822	375
12	292	948	872	1163	822	375
	442	1098	1022	1313	972	525

—
38 NAL 36

NAL 36 kV

—
39 Earthing switch EB 36

—
38

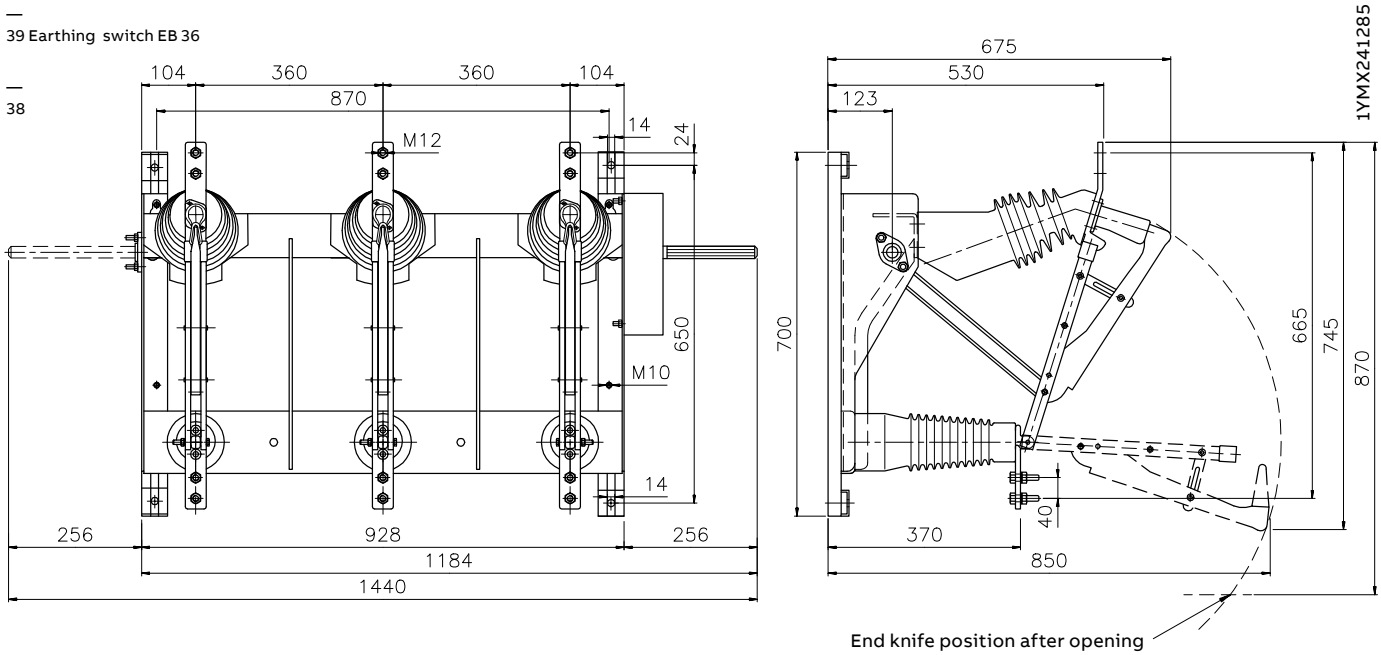

EB 36

—
39

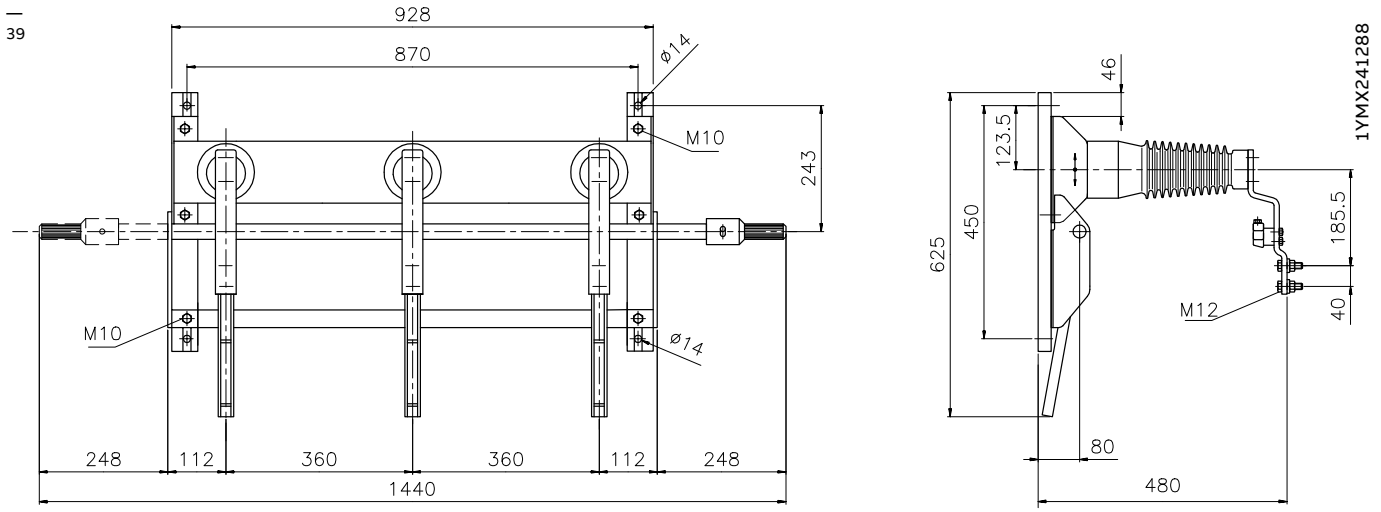

—
40
NAL 36 with earthing switch EB 36

NAL 36 + EB 36

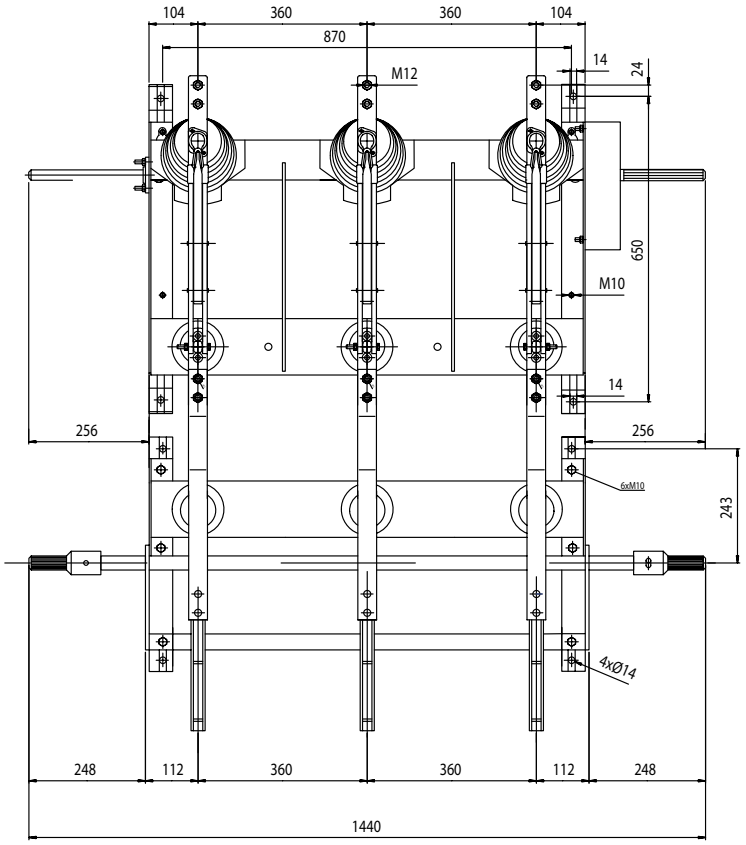

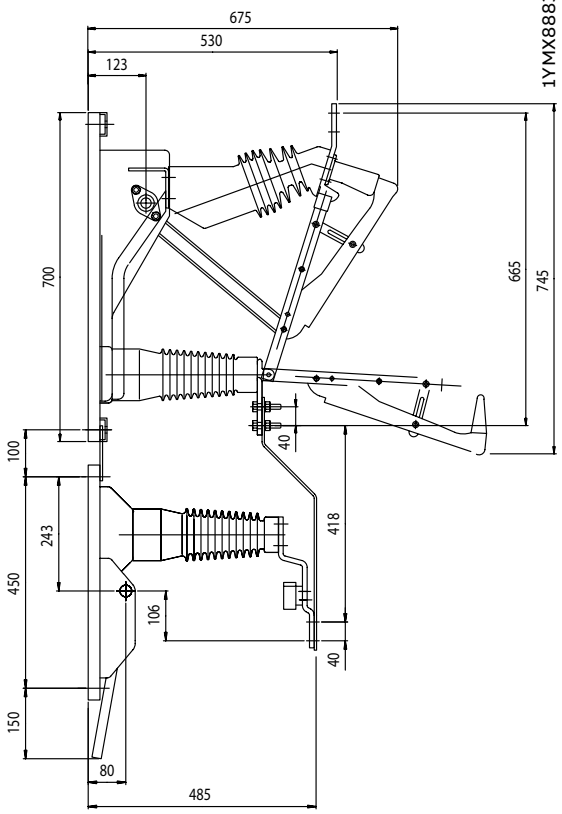

—
41
NALF 36 with EB earthing switch on opening side

NALF 36 + EB on opening side

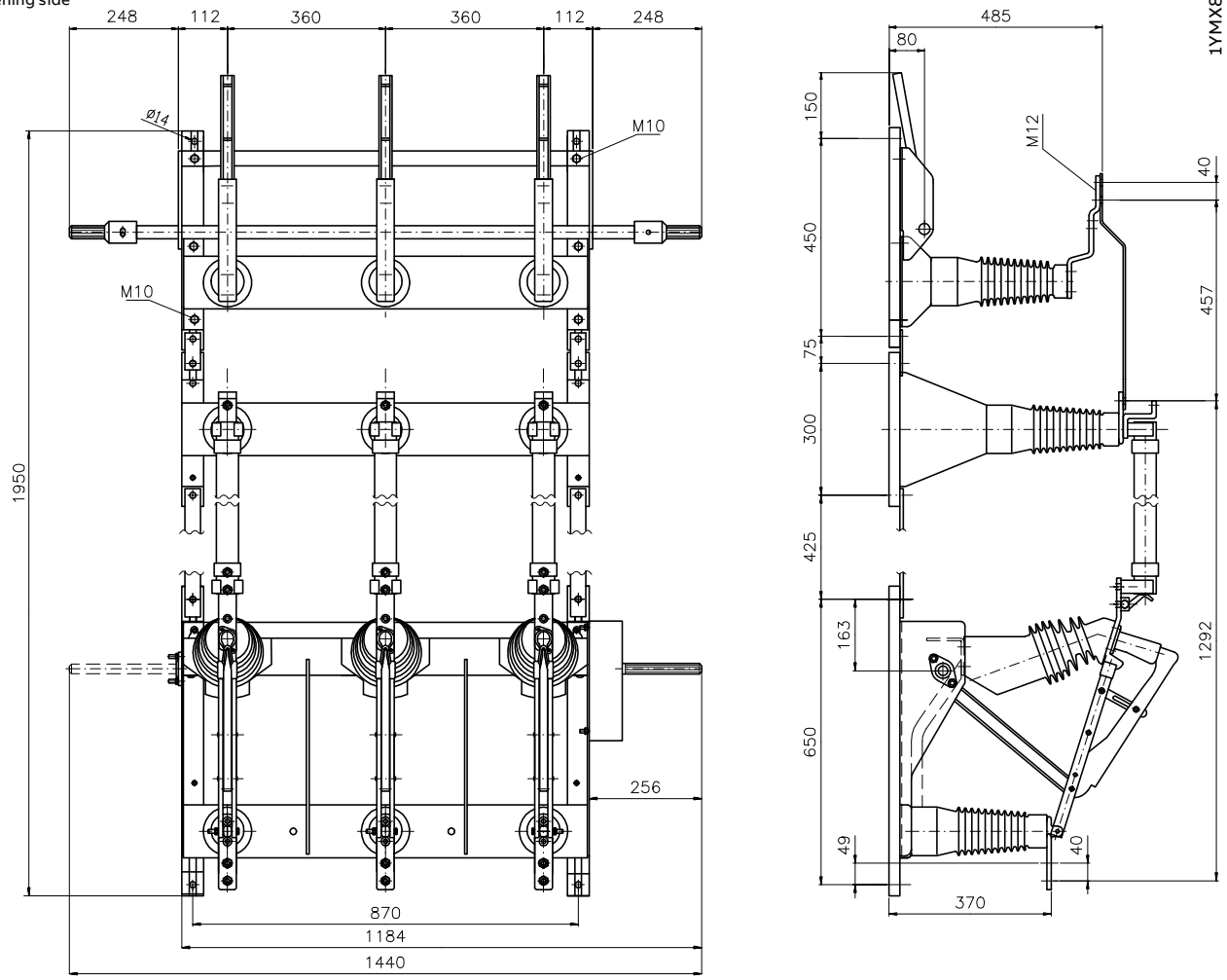

—

ABB Contact Center
tel.: +48 22 22 37 777
e-mail: contact.center@pl.abb.com

ABB Sp. z o.o.
Branch in Przasnysz
59 Leszno St.
06-300 Przasnysz, Poland
Phone: +48 22 22 38 900
Fax: +48 22 22 38 950

www.abb.pl

We reserve the right to make technical changes or modify the contents of this document without prior notice. With regard to purchase orders, the agreed particulars shall prevail. ABB does not accept any responsibility whatsoever for potential errors or possible lack of information in this document.
We reserve all rights in this document and in the subject matter and illustrations contained therein. Any reproduction, disclosure to third parties or utilization of its contents – in whole or in parts – is forbidden without prior written consent of ABB.

© Copyright 2020 ABB
All rights reserved

3408PL1641-W2-en. Edition 02.2020